WEAVER CONSTRUCTION MANAGEMENT, INC.
3679 S. Huron St., Suite 404
Englewood, CO 80110
Phone: (303) 789-4111 FAX: (303) 789-4310

S U B M I T T A L T R A N S M I T A L

URGENT
September 13, 2011
WGC Submittal No: 11280-001

PROJECT: **Harold Thompson Regional WRF**
Birdsall Rd.
Fountain, CO 80817
Job No. 2908

ENGINEER: **GMS, Inc.**
611 No. Weber St., #300
Colorado Springs, CO 80903
719-475-2935 Roger Sams

OWNER: **Lower Fountain Metropolitan Sewage Disposal District**
901 S. Santa Fe Ave.
Fountain, CO 80817
719-382-5303 James Heckman

CONTRACTOR: **Whipps, Inc.**

SUBJECT: Stainless Steel Slide Gates

SPEC SECTION: 11280-Slide Gates

PREVIOUS SUBMISSION DATES:

DEVIATIONS FROM SPEC: ___ YES _X_ NO

CONTRACTOR'S STAMP: This submittal has been reviewed by Weaver General Construction and approved with respect to the means, methods, techniques, & safety precautions & programs incidental thereto. Weaver General Construction also warrants that this submittal complies with contracted documents and comprises on deviations thereto:

Contractor's Stamp:	Engineer's Stamp:
Date: 9/13/11 Reviewed by: H.C. Myers (X) Reviewed Without Comments ( ) Reviewed With Comments ENGINEER'S COMMENTS:	

Whipps, inc.

P.O. Box 1058 • 370 South Athol Rd.
Athol, Massachusetts 01331
Phone: (978) 249-7924
Fax: (978) 249-3072

08/19/11

Weaver Construction Management, Inc.
3679 So. Huron Street,
Suite 404,
Englewood, CO 80110

Subject: Harold D Thompson Regional WRF
Your P.O. # L.O.I.
Our Ref. # 20610 SUBMITTAL 01

Attn: John Jacob / Leslie Brown,

Please find attached (1) electronic copy of the following install, shop drawings & submittal information for the above-mentioned project for review and approval. Whipps Inc require approval / comments in writing before we can release for manufacture.

Project Specific Drawings

A-206-100	(A)	Stainless Steel Slide Gate Engineering Standards
BC-921-459	(A)	(2) Series 921 S.S. Slide Gate Install, 36” x 40” Tag: SG-2 & SG-6
BC-921-459-S2	(A)	Series 921 Section Details.
BC-921-460	(A)	(1) Series 921 S.S. Slide Gate Install, 36” x 28” Tag: SG-4
BC-921-461	(A)	(1) Series 921 S.S. Slide Gate Install, 24” x 40” Tag: SG-3
BC-921-462	(A)	(1) Series 921 S.S. Slide Gate Install, 36” x 52” Tag: SG-1
BC-921-462-S2	(A)	Series 921 Section Details
BC-921-463	(A)	(1) Series 921 S.S. Slide Gate Install, 36” x 52” Tag: SG-5
BC-921-463-S2	(A)	Series 921 Section Details

Standard Drawings

BC-101-063	(E)	Whipps Type 101 Operator
BC-101-087	(C)	Whipps Type 101 Operator
ST-100-005	(B)	101 Adapter plate

Miscellaneous

920 Series	Whipps Series 920 Slide Gate Catalog Data
20610 Compliance	Certificate of Compliance

I,OM Manual Installation, O&M Manual
Lubrication Lubrication Chart
Adhesive Anchor Recommendations Sheet

Notes:

1. SG-1 & 5 – Operator EL 5424.83 stated in 11280-7 slide gate schedule dictates 52" slide height travel is restricted to approx 41".

2. SG-1, SG-3 to 5 – It is noted the seating / unseating design head pressures of +/- 4.7' indicated on the install drawings exceed the slide heights.

3. Provisional O&M documents are attached for review, full project specific O&M's will be forwarded in due course with 'As-built' drawings upon approval & manufacture.

Please verify all proposed and/or existing structure dimensions to ensure that the equipment will be properly fabricated for the desired location.

Please don't hesitate to contact us at your earliest convenience with any questions or concerns you may have during the review of this submittal.

Sincerely,
Whipps, Inc.

Andrew Coverdale.

Project Manager

cc. Water Technology Group Attn: Drew Goodyear

ENGINEERING STANDARDS	Whipps, inc. 370 South Athol Rd, Athol MA 01331	DATE 08/19/11	DRAWN BY APC
		S.O. NUMBER **20610**	
STAINLESS STEEL SLIDE GATES		DRAWING NUMBER **A-206-100**	REV **A**

GATE DESIGN TO AWWA STANDARD C561-04
WELDING TO AWS D1.6

SLIDE

- MIN THICKNESS 1/4" ALL PARTS
- MAX BENDING STRESS 15,000 PSI
- MAX BENDING DEFLECTION < 1/720 OF SPAN

FRAME

- MIN THICKNESS 1/4" ALL PARTS

STEM

- MAX UNSUPPORTED STEM LENGTH <=200 L/r BASED ON PITCH DIAMETER

HOIST

- MAX 40# PULL @ SPECIFIED OPERATING HEAD

MATERIAL STANDARDS

SLIDE PLATE	ASTM A240, TYPE 304L STAINLESS STEEL
SLIDE STIFFENERS	ASTM A240, TYPE 304L STAINLESS STEEL
SLIDE STEM CONNECTOR	ASTM A240, TYPE 304L STAINLESS STEEL
FRAME GUIDE	ASTM A240, TYPE 304L STAINLESS STEEL
FRAME INVERT	ASTM A240, TYPE 304L STAINLESS STEEL
FRAME SEALS	ASTM D4020 UHMWPE
INVERT SEAL	ASTM D2000, 55-60 DUROMETER NEOPRENE
COMPRESSION CORD	ASTM D-2000 NITRILE
STEM	ASTM A276, TYPE 304 STAINLESS STEEL
STEM COVER	ASTM D3935 POLYCARBONATE W/ CAP & VENTS
STOP COLLARS	ASTM B221, 6061-T6 ALUMINUM
OPERATOR DRIVE SLEEVE	ASTM A584, BRONZE
ALUMINUM OPERATOR CASTINGS	ASTM B26, TYPE A380
GATE FASTENERS	ASTM A276, STAINLESS STEEL GRADE 304
ANCHOR FASTENERS	ASTM A276, STAINLESS STEEL GRADE 316

WHIPPS INC MANUFACTURES ALL STAINLESS STEEL FORMED SECTIONS FROM ASTM A240 PLATE.
ASTM A276 RELATES TO STAINLESS STEEL BAR (OPERATING STEM) & TUBE SECTIONS ONLY

Ref Plan Sheet: HW-14 & 16

FOR GATE SECTIONS SEE: BC-921-459-S2
YOKE: 4-1/2" x 2" x 1/4" CHANNEL
HORIZONTAL STIFFENERS: 2-1/2" x 1/4" FLAT
VERTICAL STIFFENERS: 2-1/2" x 1/4" FLAT
ESTIMATED GATE WEIGHT: 300 LB

ALL OBSTRUCTIVE HAND RAILING OR FLOORING TO BE MODIFIED BY OTHERS

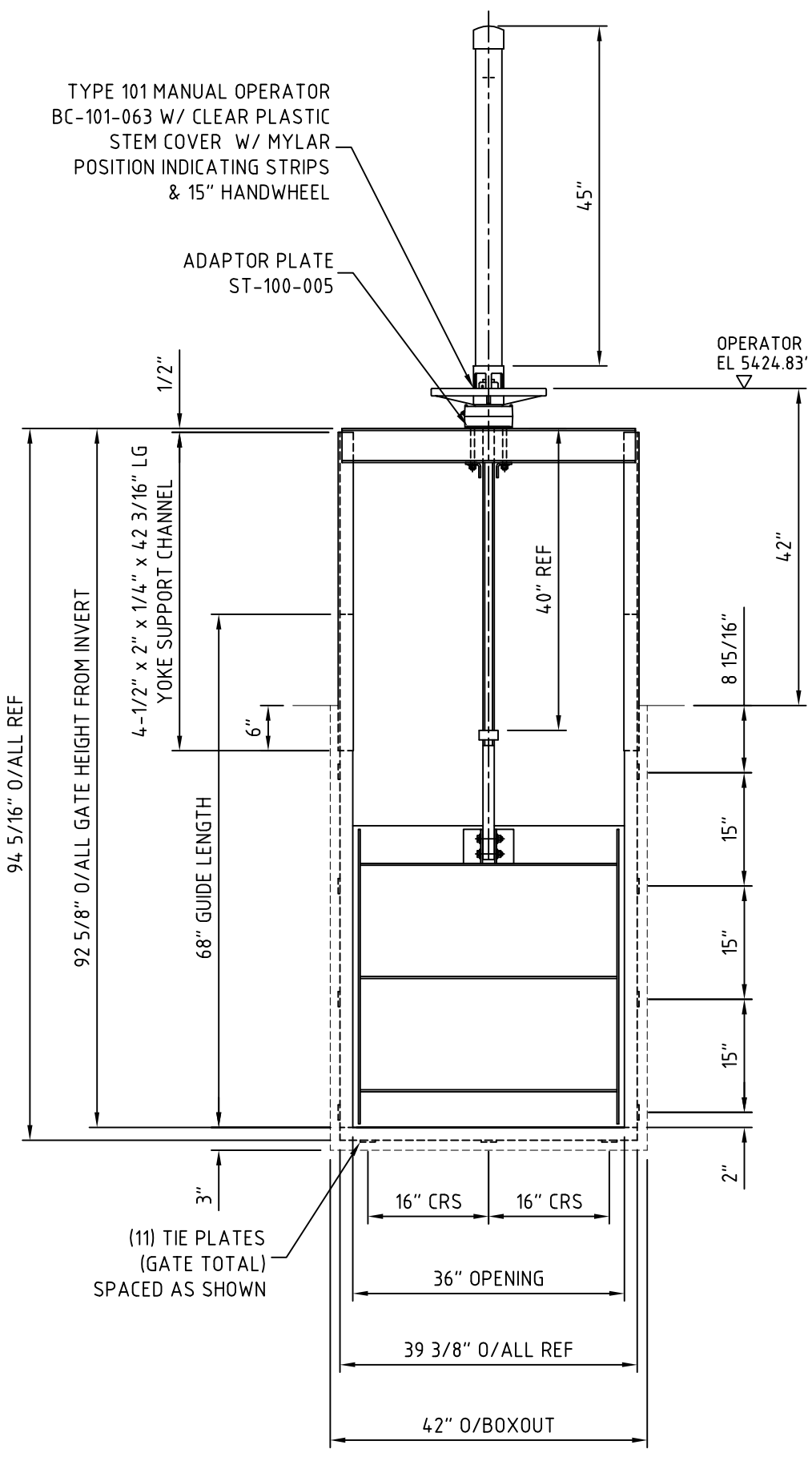

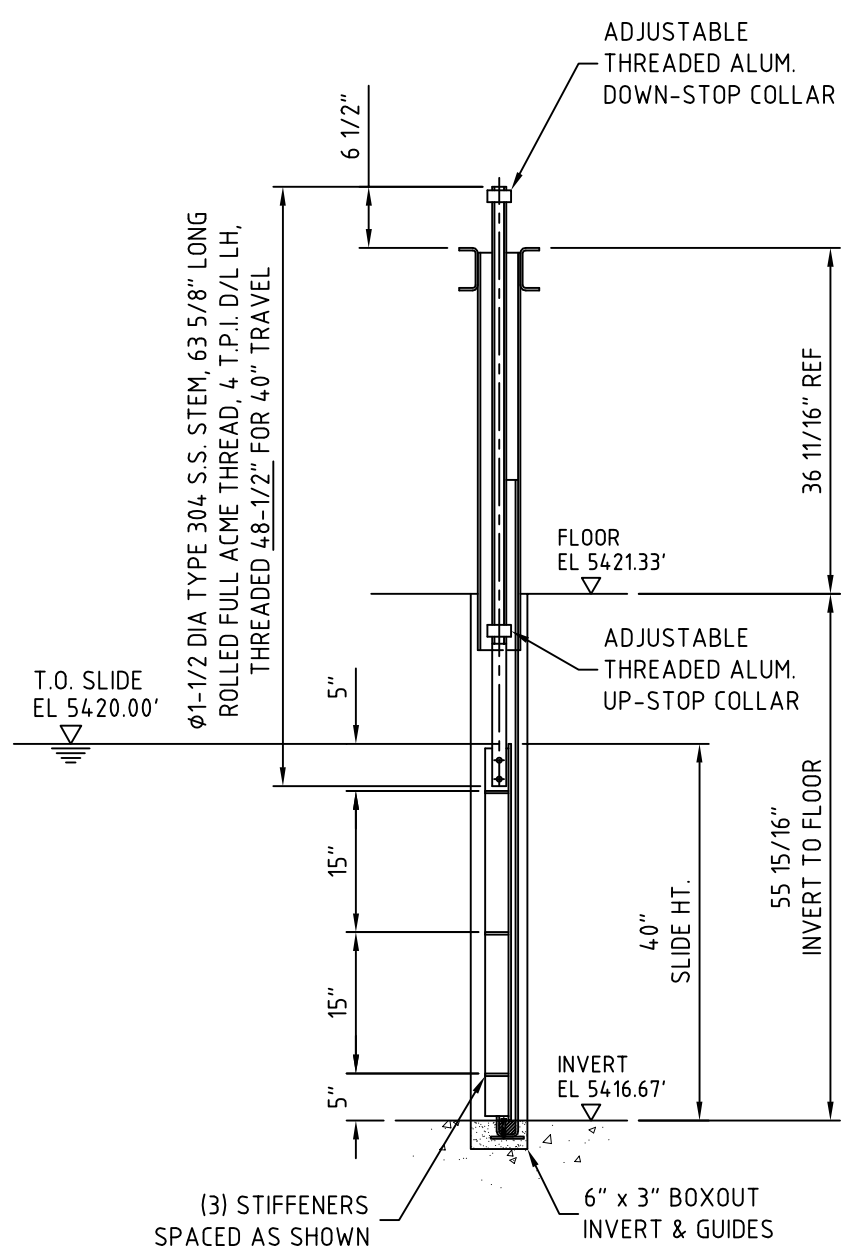

Title SERIES 921 S.S. SLIDE GATE INSTALL. 36" x 40"	Quantity: 2	Scale: 1:20		DO NOT SCALE THIS DRAWING Work to Dimensions Linear Dimensions are Inches					
	Tag No's: SG-2 & SG-6								
Project HAROLD D THOMPSON REG. WRF	Job No: #A5	Seating	Unseating	Requested Concrete Opening Tolerances Height & Width ±1/4" Squareness ±3/8 Diagonal	A	Original Issue	08/18/11	APC	APC
Location HEADWORKS - SCREEN CHANNEL OUT	Design Head	3.5'	0'		Rev.	Rev. Record	Date	Eng.	Chk.
Drg. No. BC-921-459 / S.O. No. 20610	Leakage Rate GPM/ft of seal	0.1	0.1	THIRD ANGLE PROJECTION	Whipps, inc.		370 SOUTH ATHOL RD. ATHOL, MA 01331		

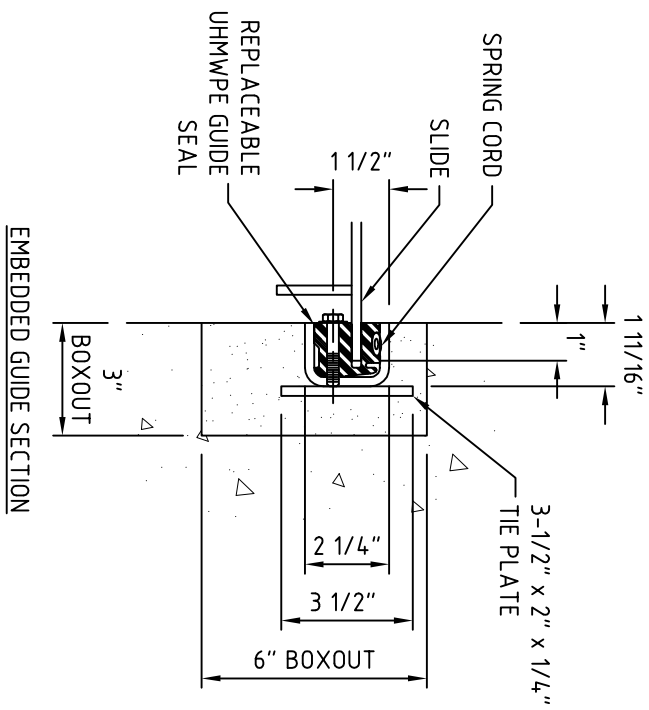

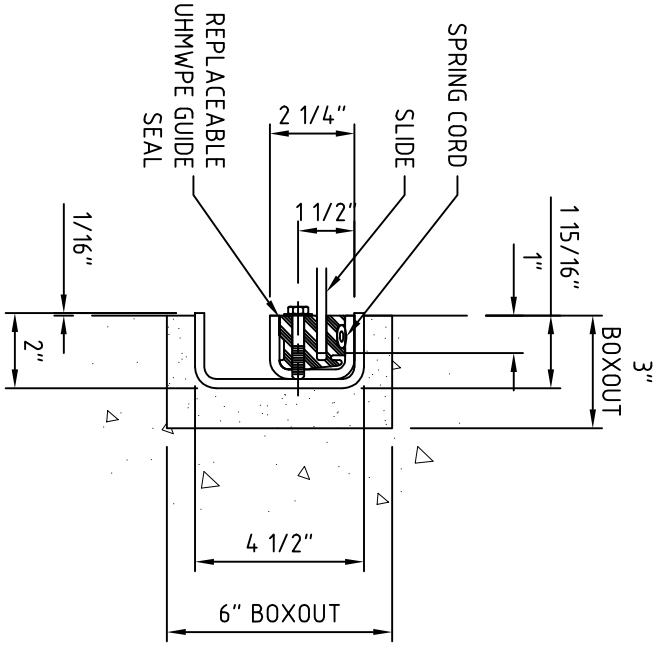

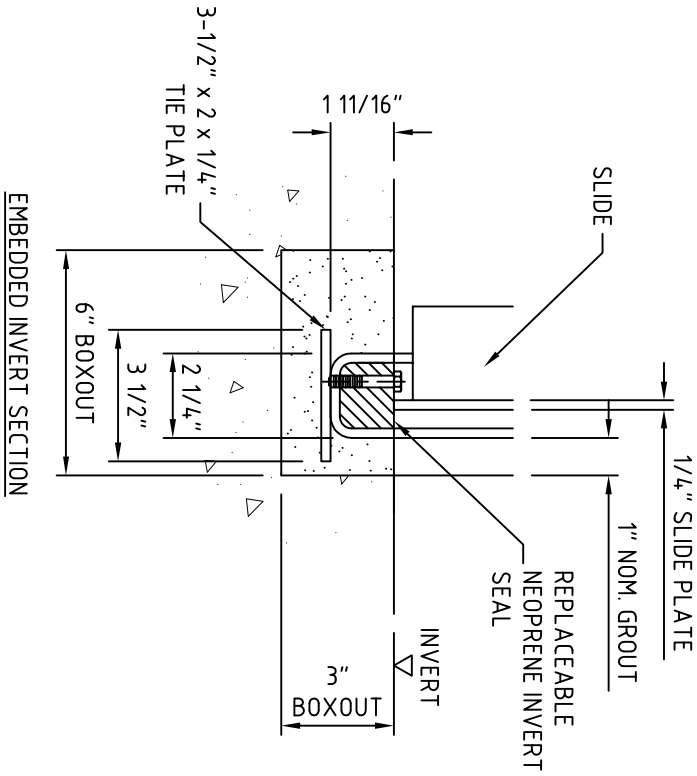

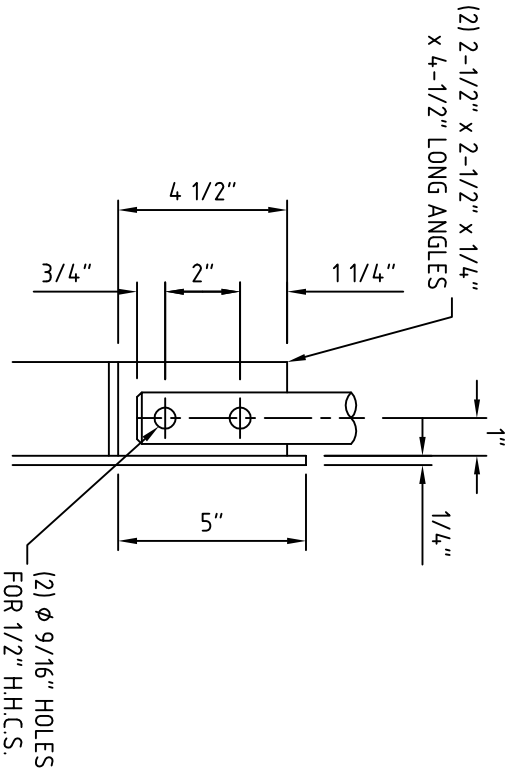

Title: SERIES 921 SLIDE GATE SECTION DETAILS	DO NOT SCALE THIS DRAWING Work to Dimensions Linear Dimensions are Inches			
	Scale: 1:5	A	Original Issue	08/18/11	APC	APC
Material: STAINLESS STEEL GRADE 304L		Rev.	Rev. Record	Date	Eng.	Chk.
Drg. No. BC-921-459-S2	S.O. No. 20610	THIRD ANGLE PROJECTION	Whipps, inc.	370 SOUTH ATHOL RD. ATHOL, MA 01331		

Ref Plan Sheet: HW-14 & 16

FOR GATE SECTIONS SEE: BC-921-459-S2
YOKE: 4-1/2" x 2" x 1/4" CHANNEL
HORIZONTAL STIFFENERS: 2-1/2" x 1/4" FLAT
VERTICAL STIFFENERS: 2-1/2" x 1/4" FLAT
ESTIMATED GATE WEIGHT: 270 LB

ALL OBSTRUCTIVE HAND RAILING OR FLOORING TO BE MODIFIED BY OTHERS

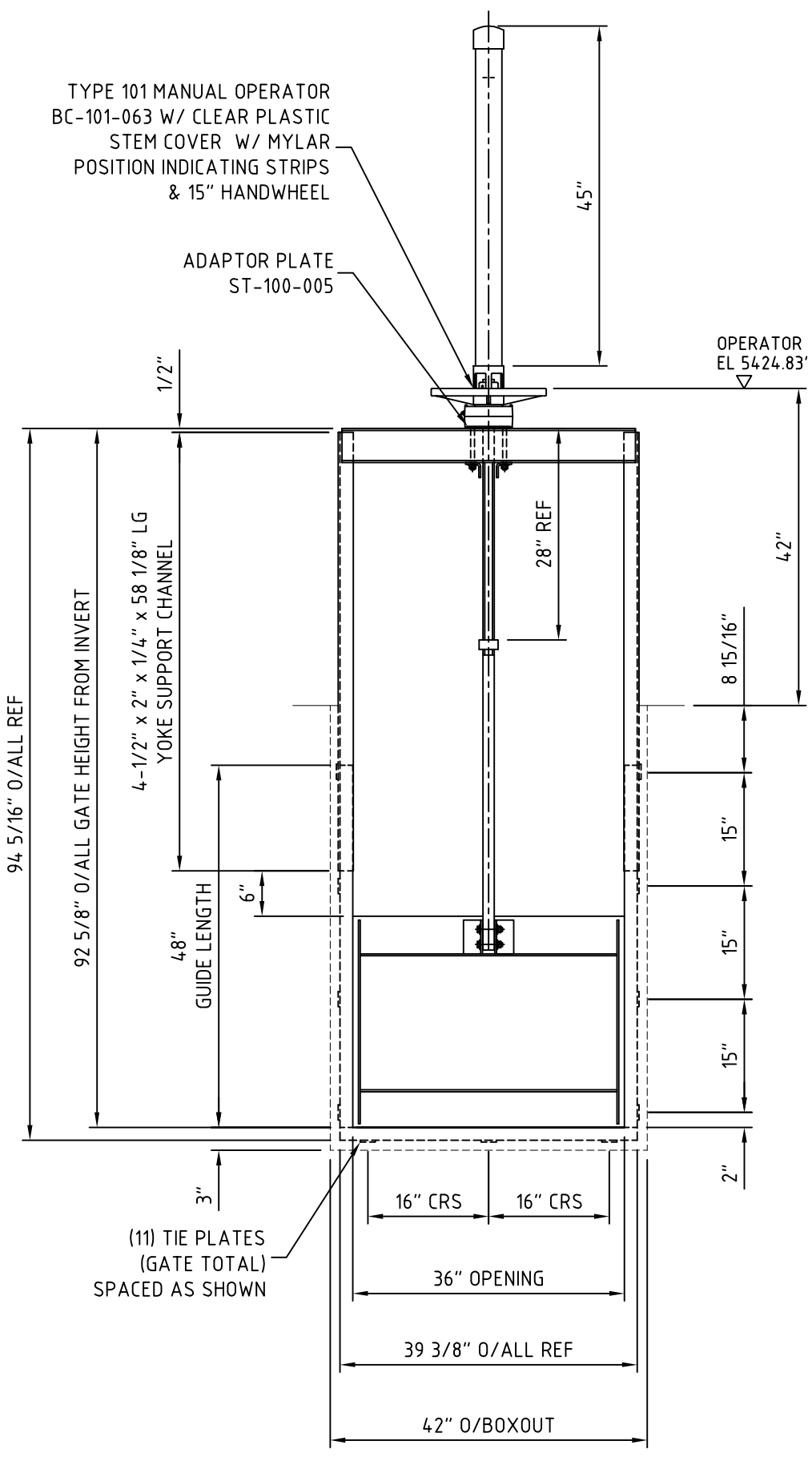

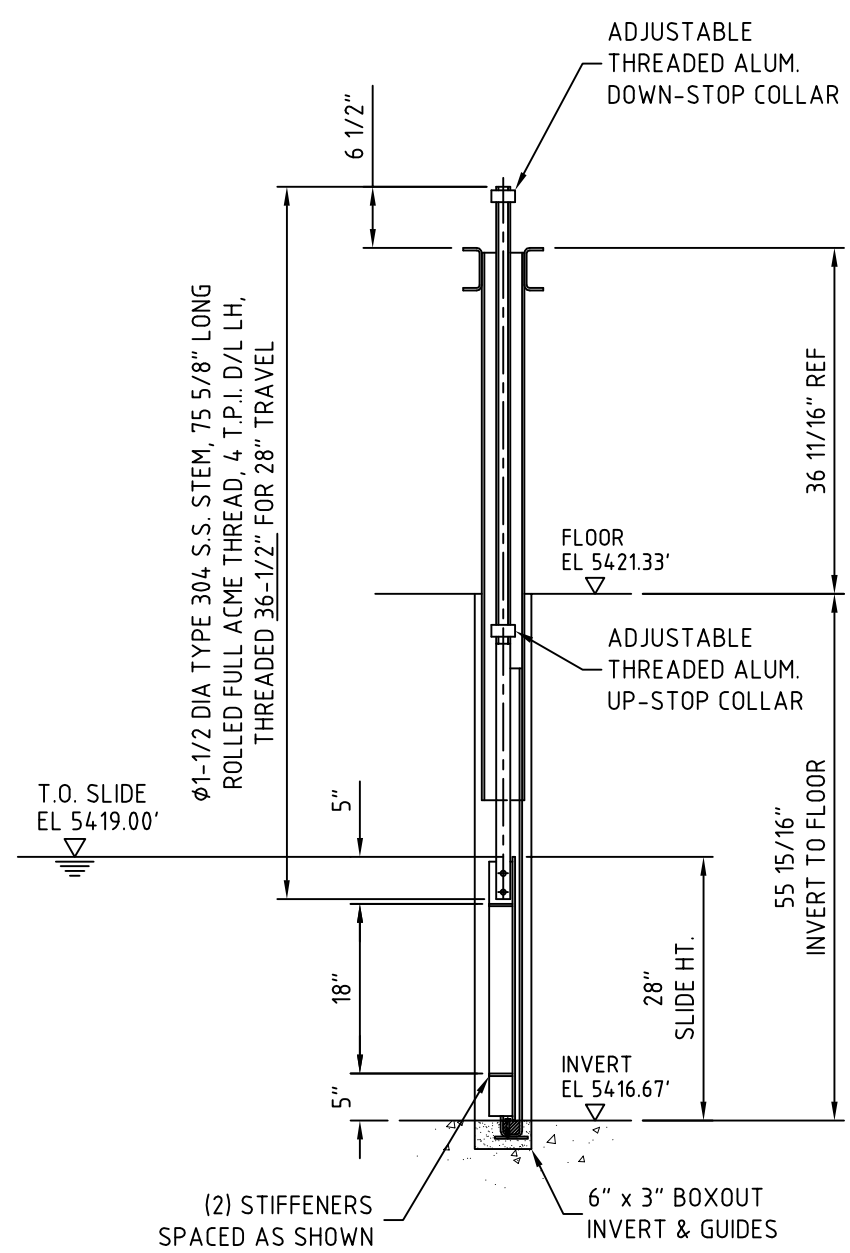

Title SERIES 921 S.S. SLIDE GATE INSTALL. 36" x 28"	Quantity: 1	Scale: 1:20		DO NOT SCALE THIS DRAWING Work to Dimensions Linear Dimensions are Inches					
	Tag No's: SG-4								
Project HAROLD D THOMPSON REG. WRF	Job No: #A5	Seating	Unseating	Requested Concrete Opening Tolerances Height & Width ±1/4" Squareness ±3/8 Diagonal	A	Original Issue	08/18/11	APC	APC
Location HEADWORKS - BYPASS CHANNEL	Design Head	4.7'	0'		Rev.	Rev. Record	Date	Eng.	Chk.
Drg. No. BC-921-460 / S.O. No. 20610	Leakage Rate GPM/ft of seal	0.1	0.1	THIRD ANGLE PROJECTION	Whipps, inc.	370 SOUTH ATHOL RD. ATHOL, MA 01331			

Ref Plan Sheet: HW-14 & 16

FOR GATE SECTIONS SEE: BC-921-459-S2
YOKE: 4-1/2" x 2" x 1/4" CHANNEL
HORIZONTAL STIFFENERS: 2-1/2" x 1/4" FLAT
VERTICAL STIFFENERS: 2-1/2" x 1/4" FLAT
ESTIMATED GATE WEIGHT: 220 LB

ALL OBSTRUCTIVE HAND RAILING OR FLOORING TO BE MODIFIED BY OTHERS

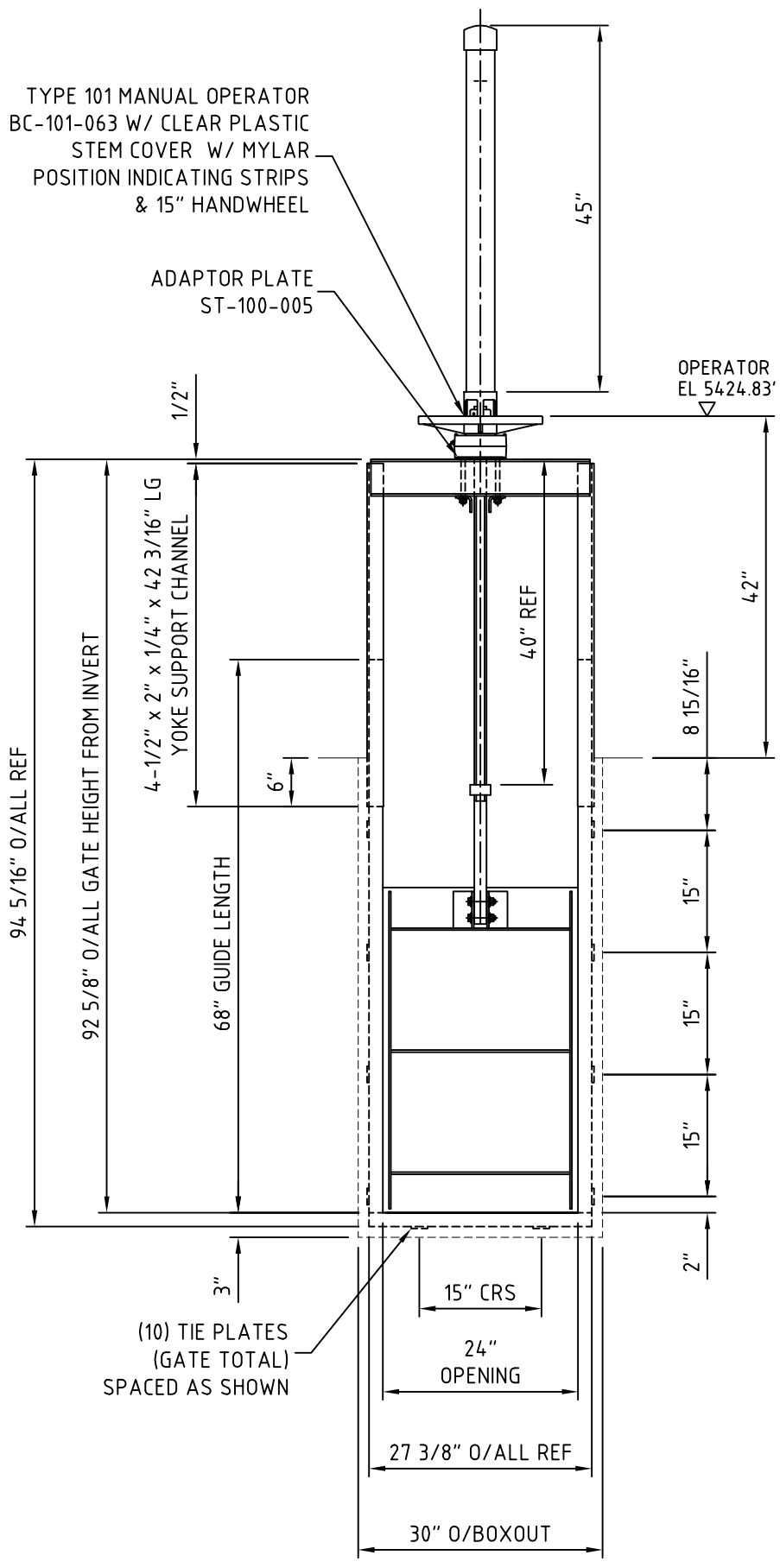

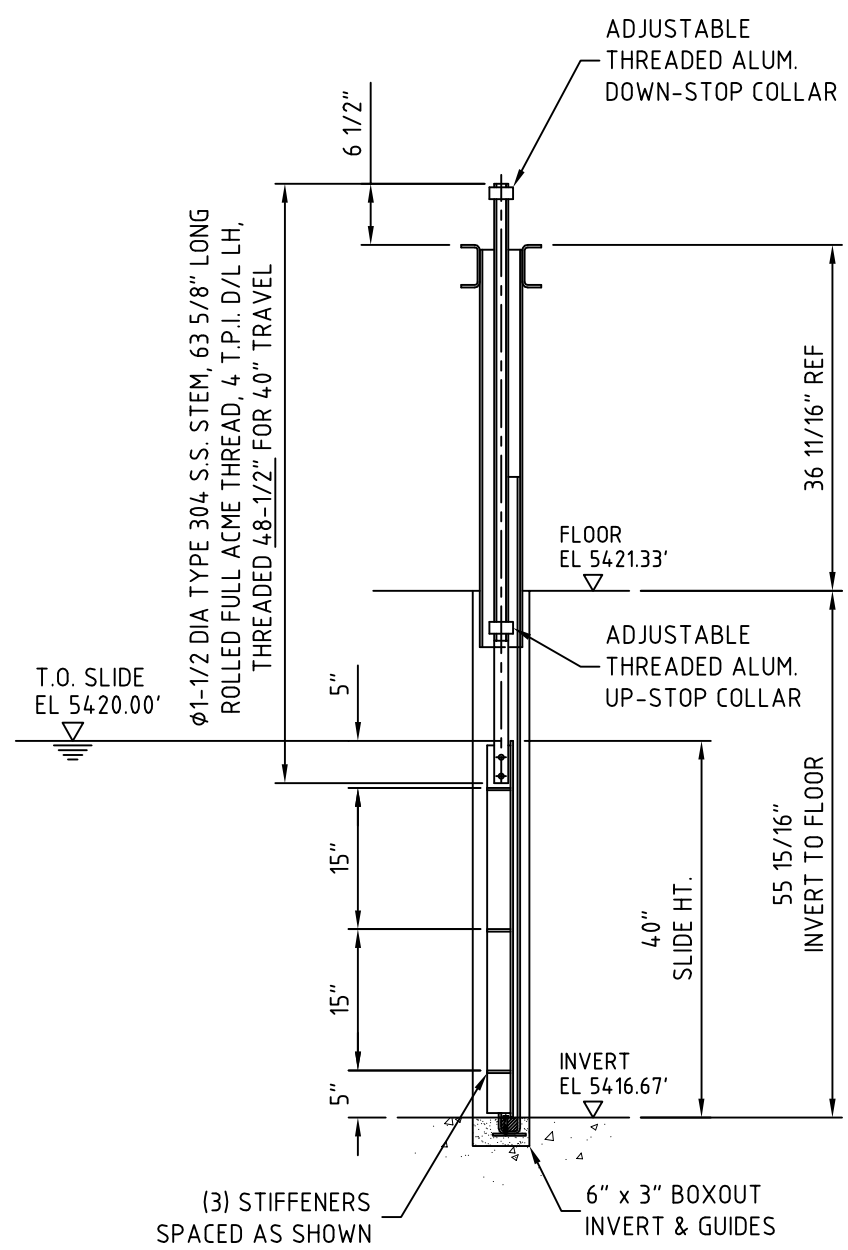

Title SERIES 921 S.S. SLIDE GATE INSTALL. 24" x 40"	Quantity: 1	Scale: 1:20		DO NOT SCALE THIS DRAWING Work to Dimensions Linear Dimensions are Inches					
	Tag No's: SG-3								
Project HAROLD D THOMPSON REG. WRF	Job No: #B5	Seating	Unseating	Requested Concrete Opening Tolerances Height & Width ±1/4" Squareness ±3/8 Diagonal	A	Original Issue	08/18/11	APC	APC
Location HEADWORKS - BYPASS CHANNEL	Design Head	4.7'	0'		Rev.	Rev. Record	Date	Eng.	Chk.
Drg. No. BC-921-461 / S.O. No. 20610	Leakage Rate GPM/ft of seal	0.1	0.1	THIRD ANGLE PROJECTION	Whipps, inc.	370 SOUTH ATHOL RD. ATHOL, MA 01331			

Ref Plan Sheet: HW-14 & 16

FOR GATE SECTIONS SEE: BC-921-462-S2
YOKE: 4-1/2" x 2" x 1/4" CHANNEL
HORIZONTAL STIFFENERS: 2-1/2" x 1/4" FLAT
VERTICAL STIFFENERS: 2-1/2" x 1/4" FLAT
ESTIMATED GATE WEIGHT: 330 LB

ALL OBSTRUCTIVE HAND RAILING OR FLOORING TO BE MODIFIED BY OTHERS

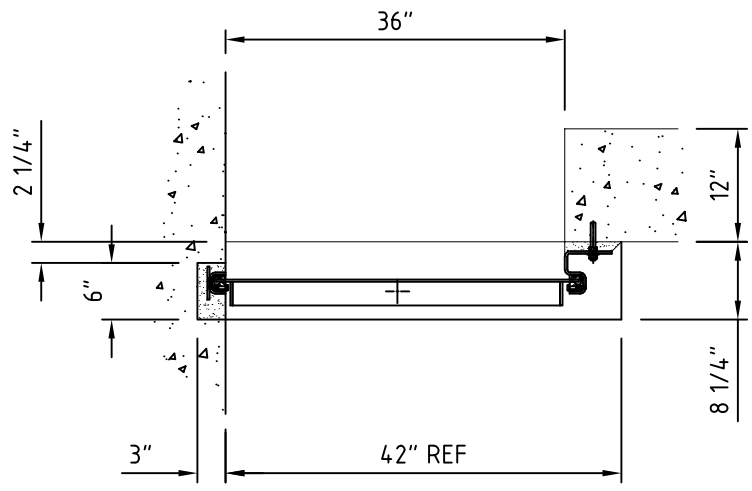

SECTION 'A-A'

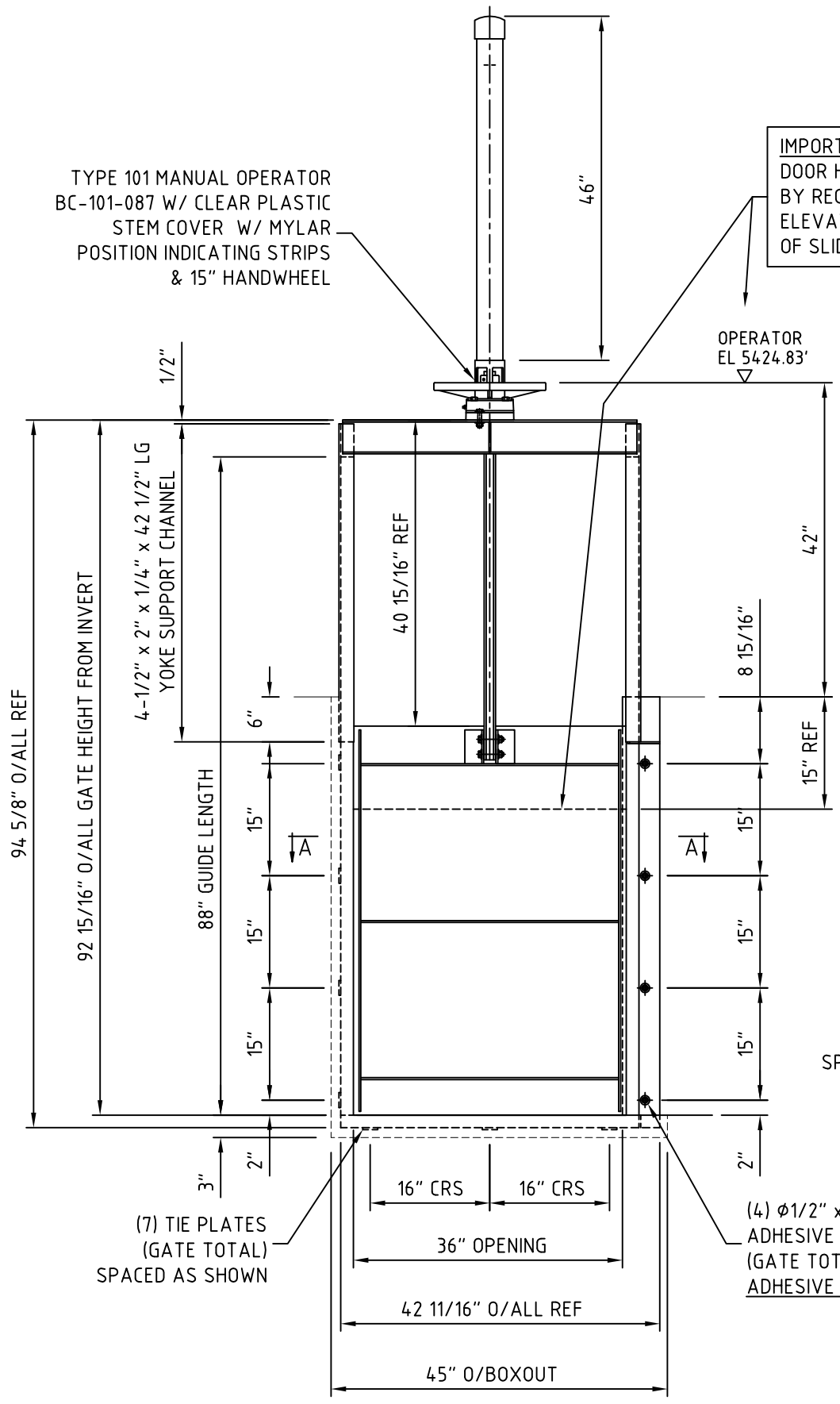

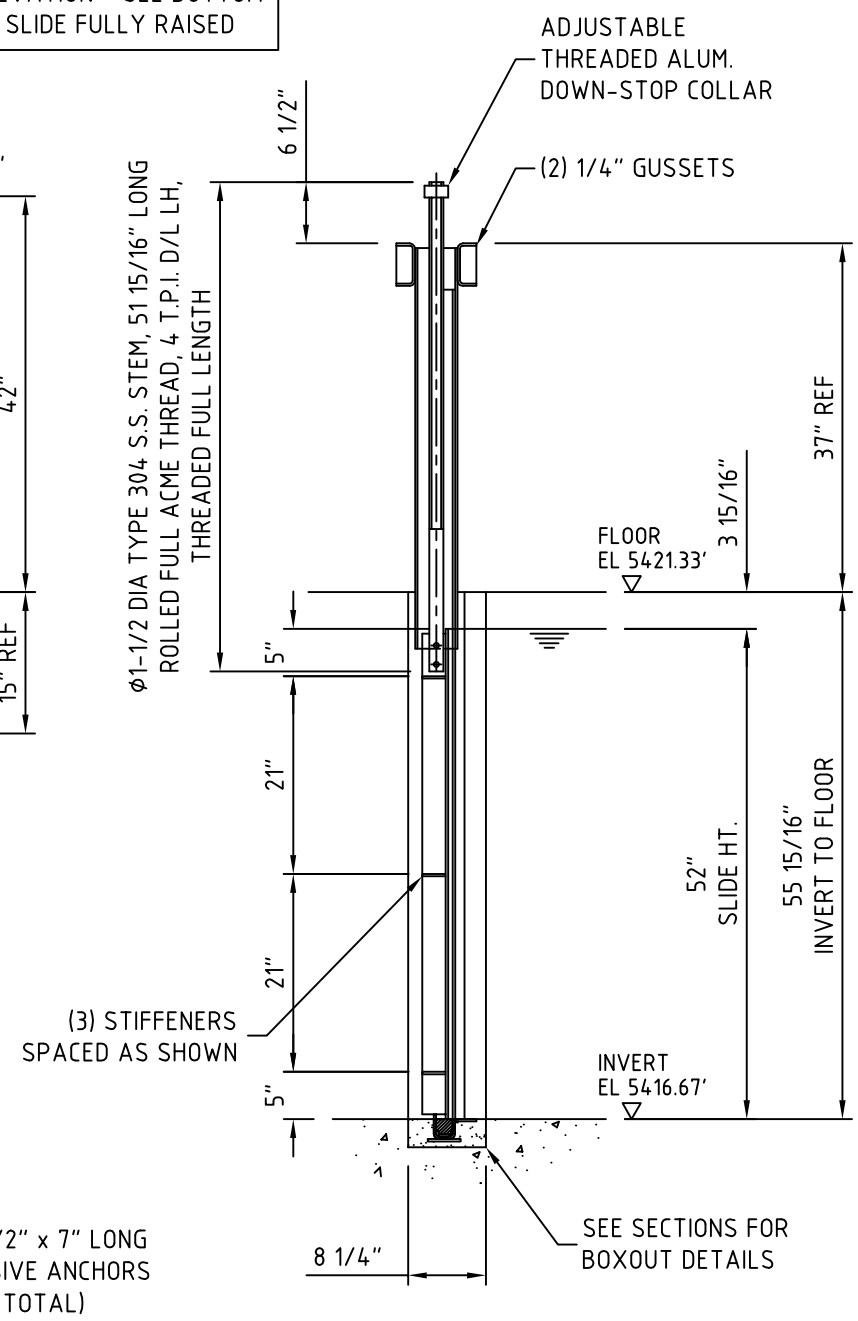

Title SERIES 921 S.S. SLIDE GATE INSTALL. 36" x 52"	Quantity: 1	Scale: 1:20		DO NOT SCALE THIS DRAWING Work to Dimensions Linear Dimensions are Inches				
	Tag No's: SG-1							
Project HAROLD D THOMPSON REG. WRF	Job No: #C5	Seating	Unseating	Requested Concrete Opening Tolerances Height & Width ±1/4" Squareness ±3/8 Diagonal	A	Original Issue	08/18/11	APC	APC
Location HEADWORKS - SCREEN CHANNEL INFL	Design Head	0'	4.7'		Rev.	Rev. Record	Date	Eng.	Chk.
Drg. No. BC-921-462 S.O. No. 20610	Leakage Rate GPM/ft of seal	0.1	0.1	THIRD ANGLE PROJECTION	Whipps, inc.		370 SOUTH ATHOL RD. ATHOL, MA 01331		

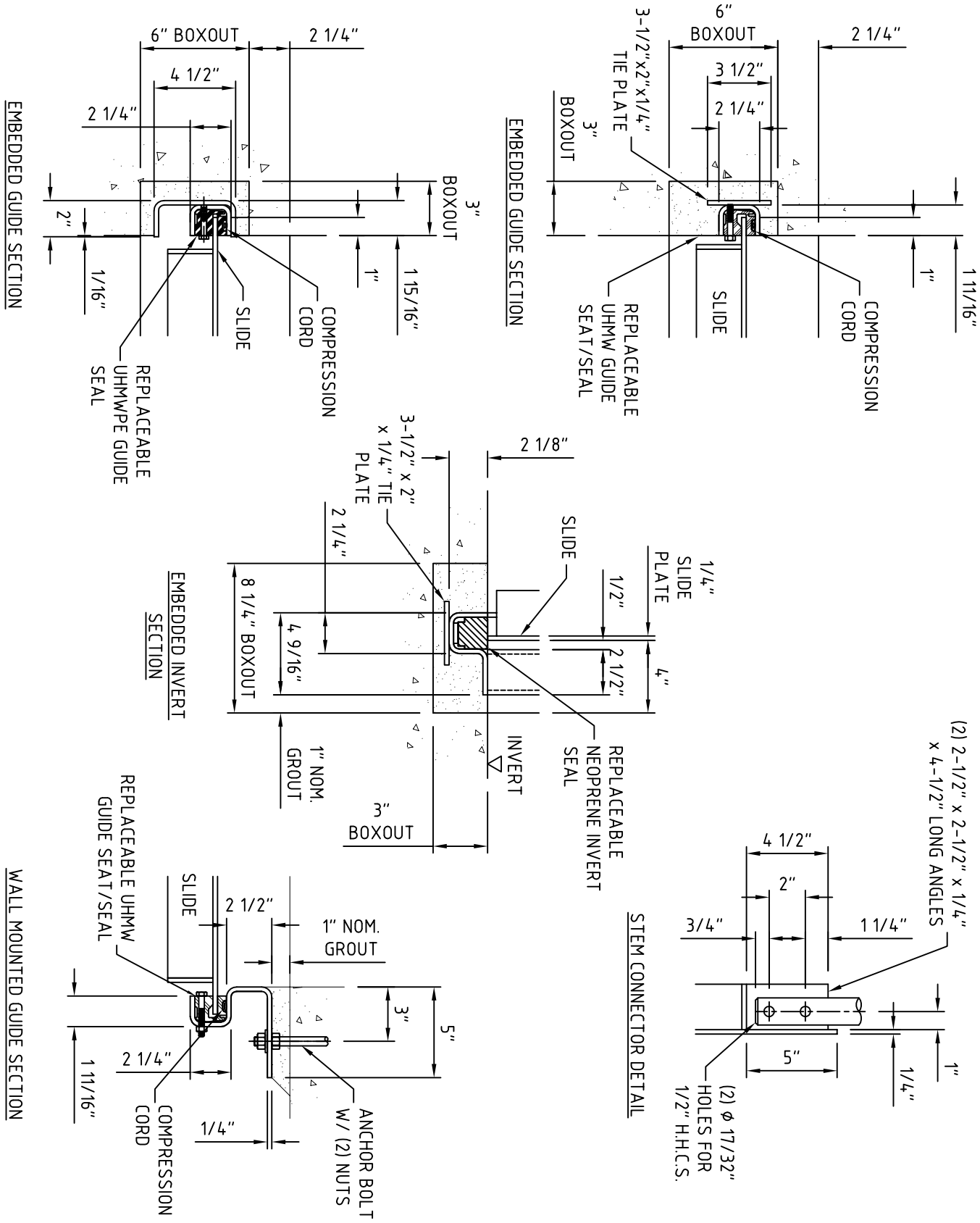

Title
SERIES 923 SLIDE GATE
SECTION DETAILS

DO NOT SCALE THIS DRAWING
Work to Dimensions
Linear Dimensions are Inches

Scale: 1:7.5

Rev.	Rev. Record	Date	Eng.	Chk.
A	Original Issue	08/18/11	APC	APC

Material STAINLESS STEEL 304L

Drg. No. BC-921-462-S2 | S.O. No. 20610

THIRD ANGLE PROJECTION

Whipps, inc.
370 SOUTH ATHOL RD.
ATHOL, MA 01331

Ref Plan Sheet: HW-14 & 16

FOR GATE SECTIONS SEE: BC-921-463-S2
YOKE: 4-1/2" x 2" x 1/4" CHANNEL
HORIZONTAL STIFFENERS: 2-1/2" x 1/4" FLAT
VERTICAL STIFFENERS: 2-1/2" x 1/4" FLAT
ESTIMATED GATE WEIGHT: 330 LB

ALL OBSTRUCTIVE HAND RAILING OR FLOORING TO BE MODIFIED BY OTHERS

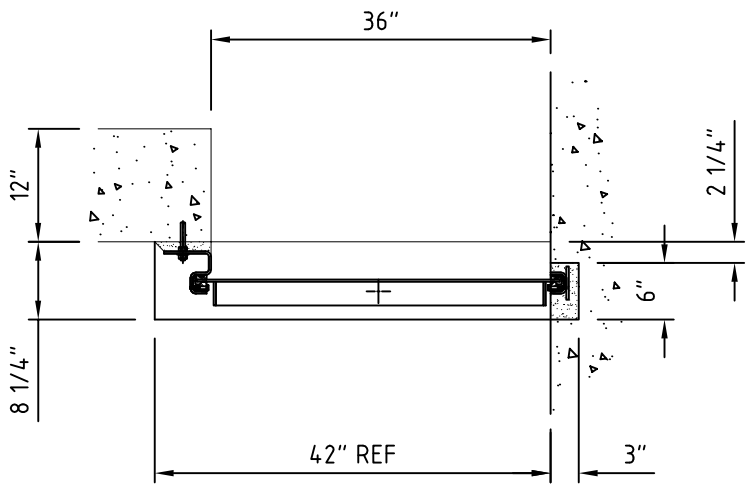

SECTION 'A-A'

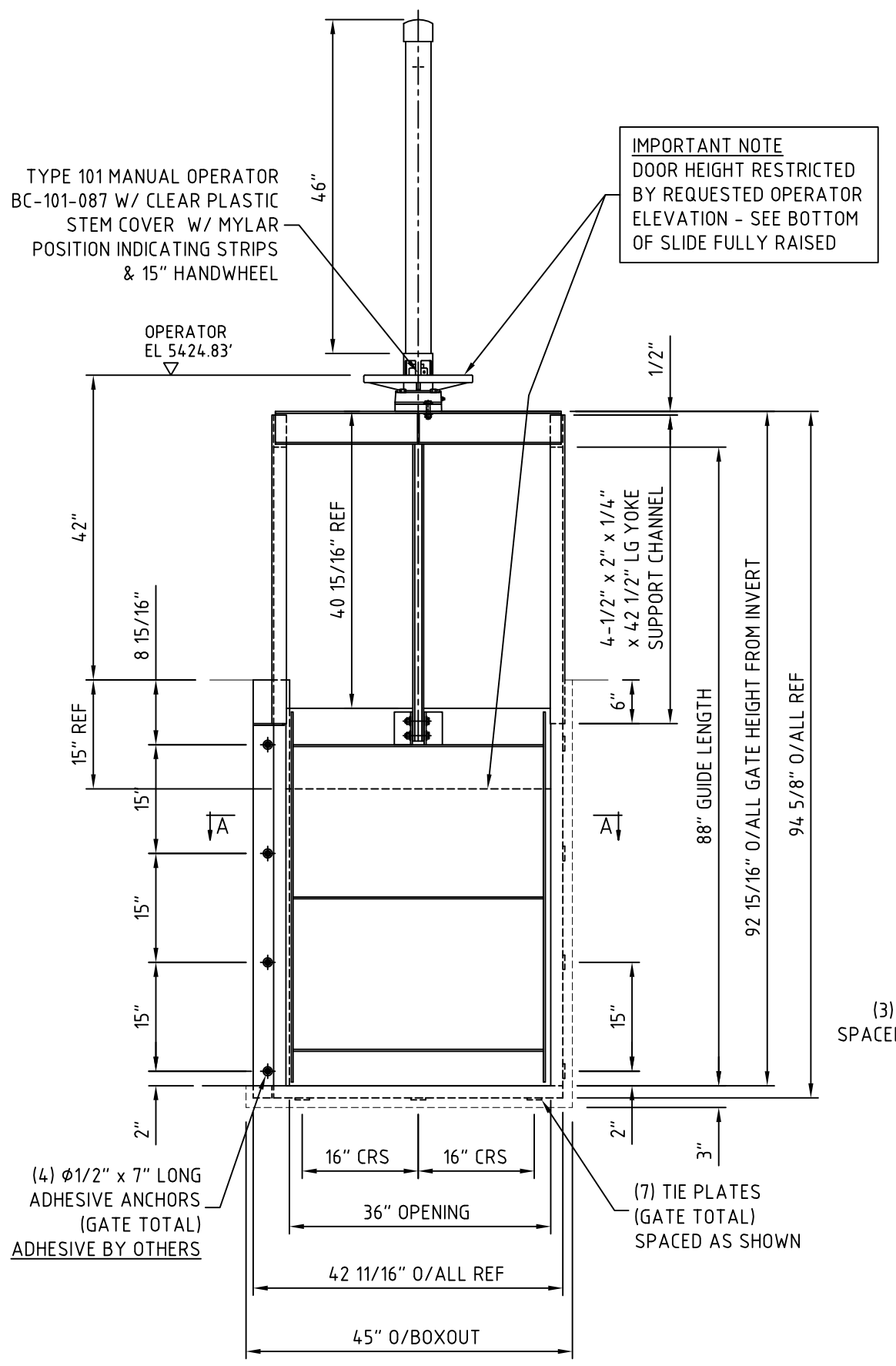

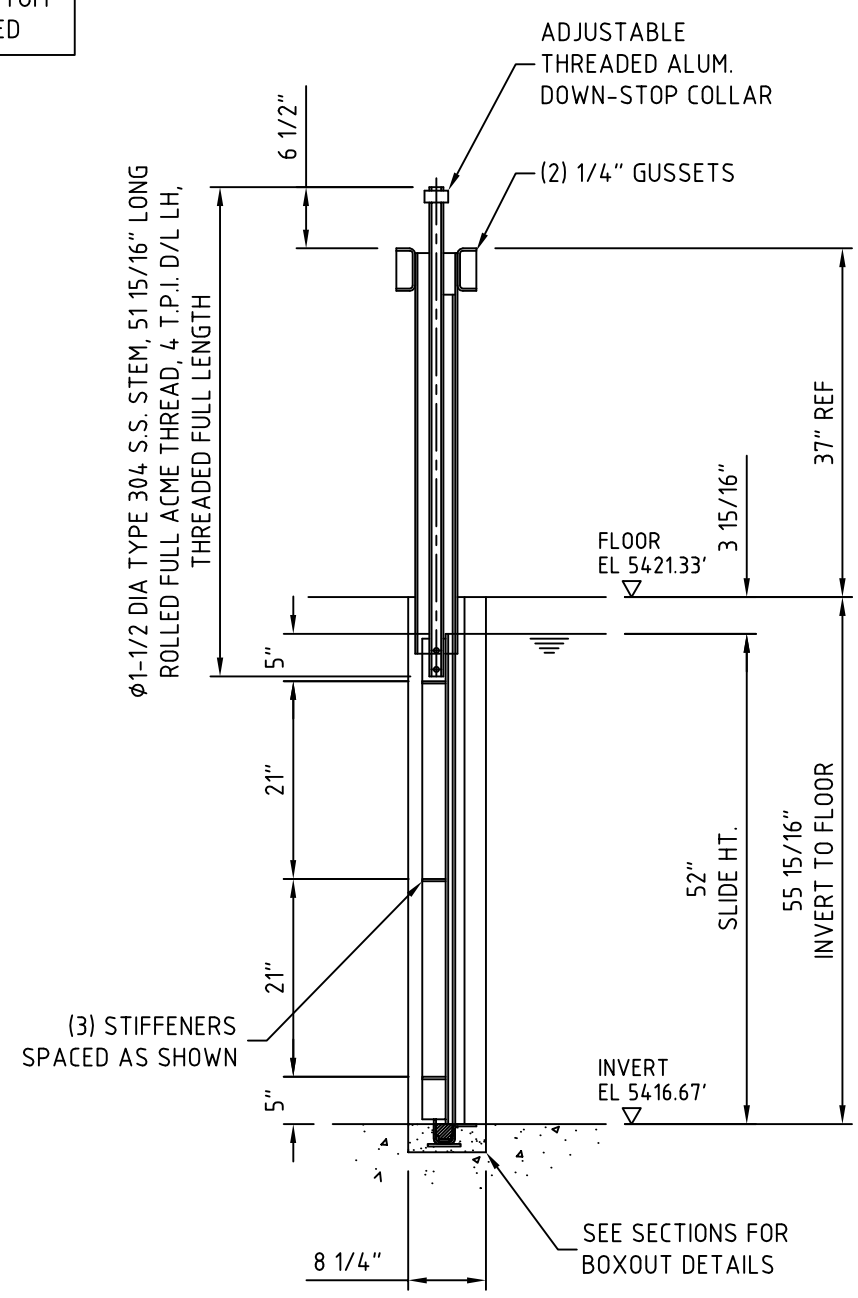

Title SERIES 921 S.S. SLIDE GATE INSTALL. 36" x 52"	Quantity: 1	Scale: 1:20		DO NOT SCALE THIS DRAWING Work to Dimensions Linear Dimensions are Inches				
	Tag No's: SG-5							
Project HAROLD D THOMPSON REG. WRF	Job No: #C5	Seating	Unseating	Requested Concrete Opening Tolerances Height & Width ±1/4" Squareness ±3/8 Diagonal	A	Original Issue	08/18/11	APC	APC
Location HEADWORKS - SCREEN CHANNEL INFL	Design Head	0'	4.7'		Rev.	Rev. Record	Date	Eng.	Chk.
Drg. No. BC-921-463 / S.O. No. 20610	Leakage Rate GPM/ft of seal	0.1	0.1	THIRD ANGLE PROJECTION	Whipps, inc.	370 SOUTH ATHOL RD. ATHOL, MA 01331			

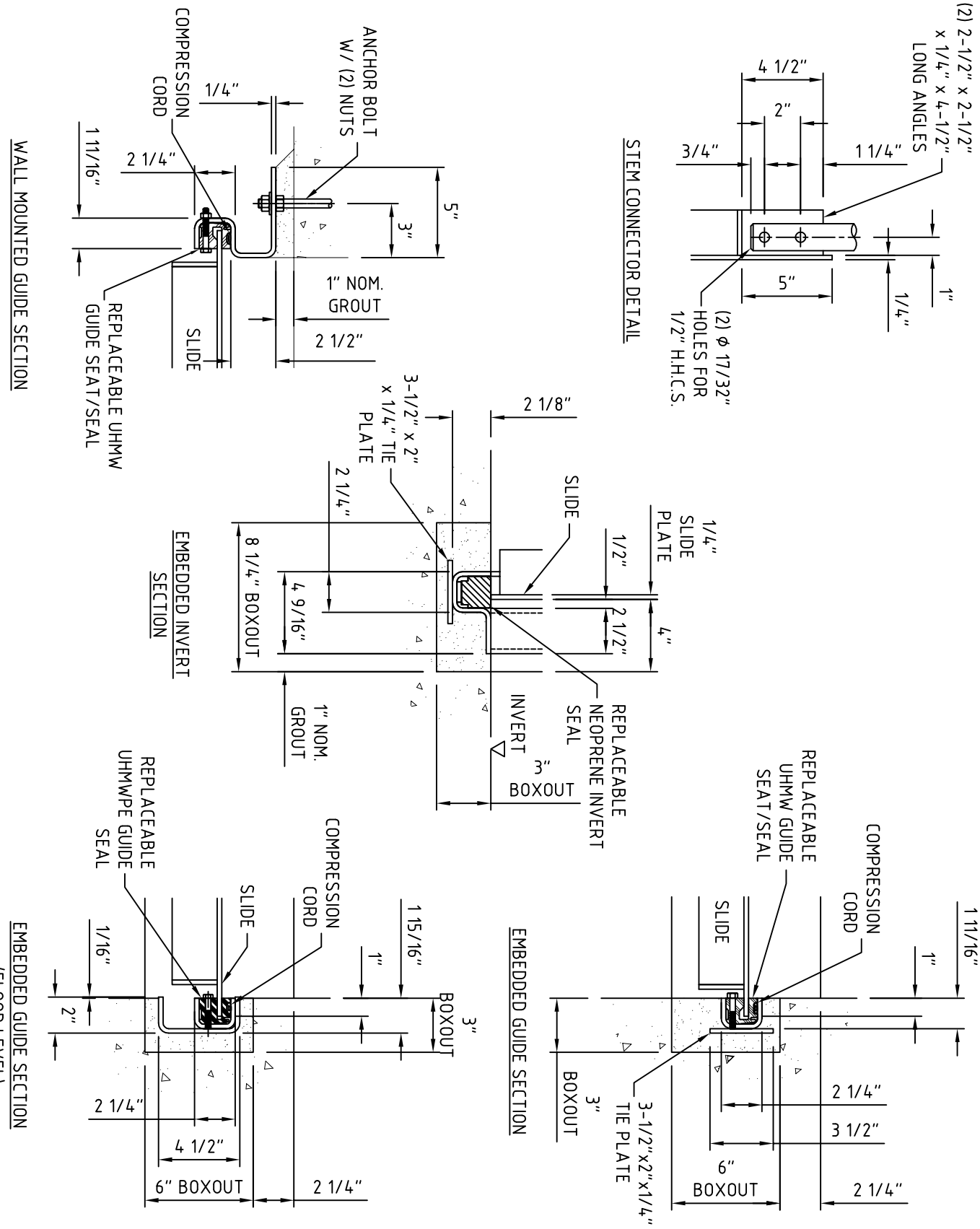

Title SERIES 923 SLIDE GATE SECTION DETAILS	DO NOT SCALE THIS DRAWING Work to Dimensions Linear Dimensions are Inches			
	Scale: 1:7.5	A	Original Issue	08/19/11	APC	APC
		Rev.	Rev. Record	Date	Eng.	Chk.
Material STAINLESS STEEL 304L	THIRD ANGLE PROJECTION	Whipps, inc.	370 SOUTH ATHOL RD. ATHOL, MA 01331			
Drg. No. BC-921-463-S2 S.O. No. 20610						

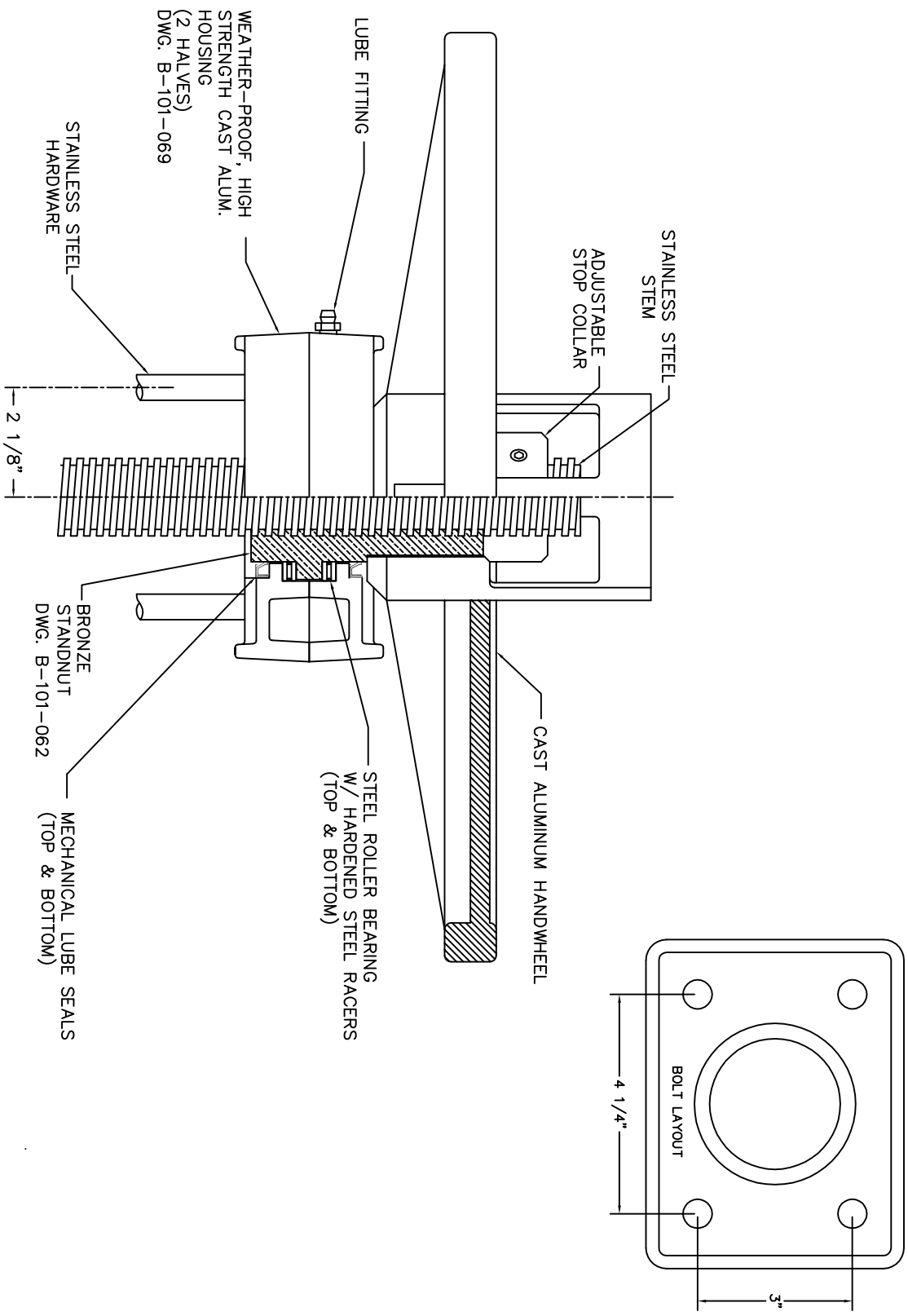

TITLE			
TYPE 101 OPERATOR GEAR RATIO 1:1			
DATE 6/28/90	SCALE NTS	DWN BY GC	APPR BY
DRAWING NO. BC-101-063			S.O. NO.

TOLERANCES

MATERIAL:

DATE	SYM	REVISION RECORD	AUTH	DR
12-94	E	REVISED NOTES		VC
6-90	D	ADDED 2 1/8" DIM.		GC
6-90	C	ADDDED STEM COVER NOTE		GC
6-90	B	REVISED H'WL & THD'D DIR		GC
10-89	A	ADDED ROLLER BRGS.		VC

Whipps, inc. 38 SOUTH MAIN STREET ATHOL, MA 01331

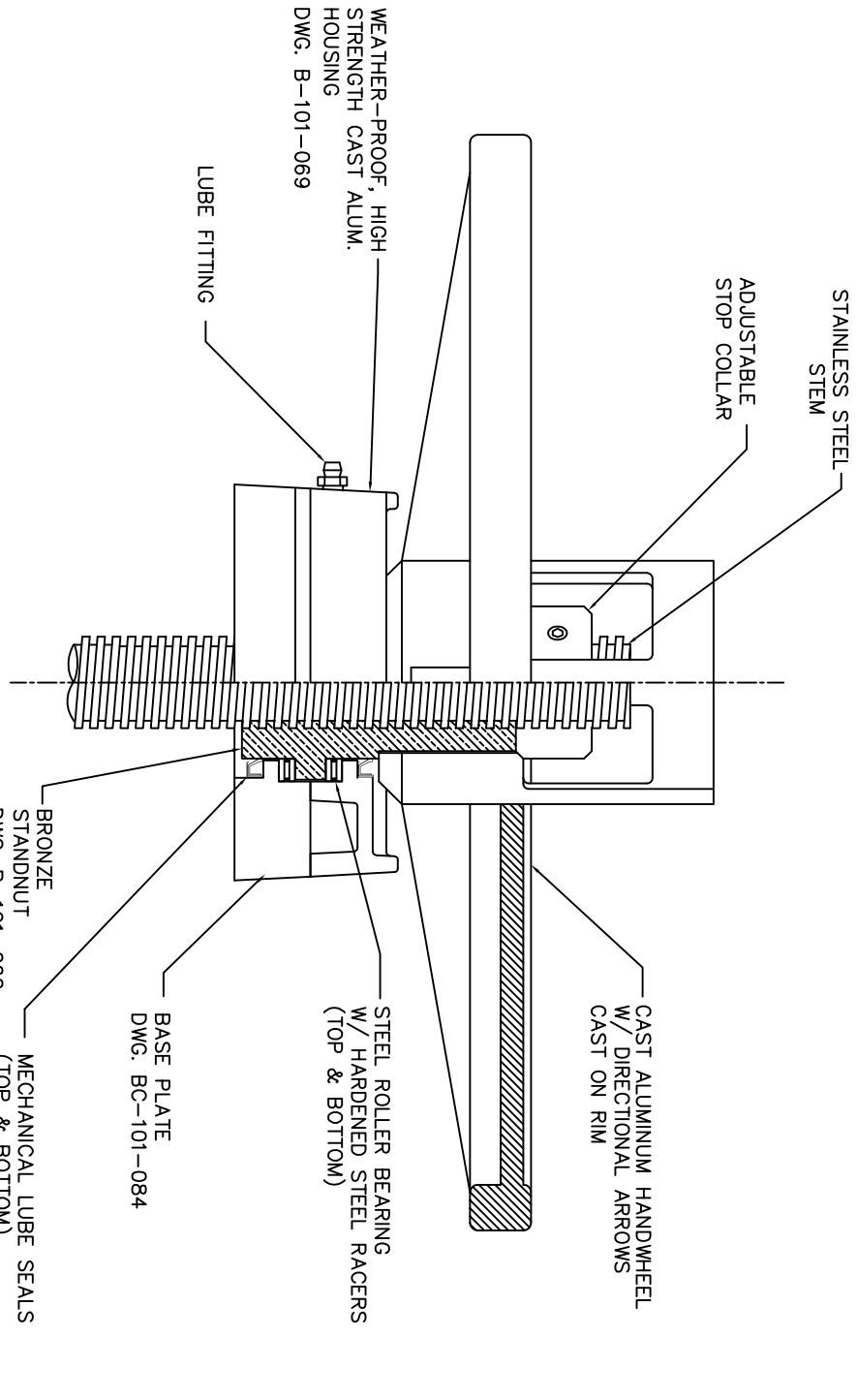

TITLE TYPE 101 OPERATOR W/ BASE PLATE; GEAR RATIO 1:1				TOLERANCES			
DATE 6/28/90	SCALE NTS	DWN BY GC	APPR BY		8-00	C	ADDED NOTE ABOUT ARROWS	VC
					12-94	B	REVISED NOTES & REPRINT	VC
					12-94	A	WAS 3/4" DIA. BOLTS	VC
DRAWING NO. BC-101-087			S.O. NO.	MATERIAL:	DATE	SYM	REVISION RECORD	AUTH / DR

Whipps, inc. 38 SOUTH MAIN STREET ATHOL, MA 01331

STANDARD TYPE 101 ADAPTER PLATE TO SUIT
STAINLESS STEEL YOKE

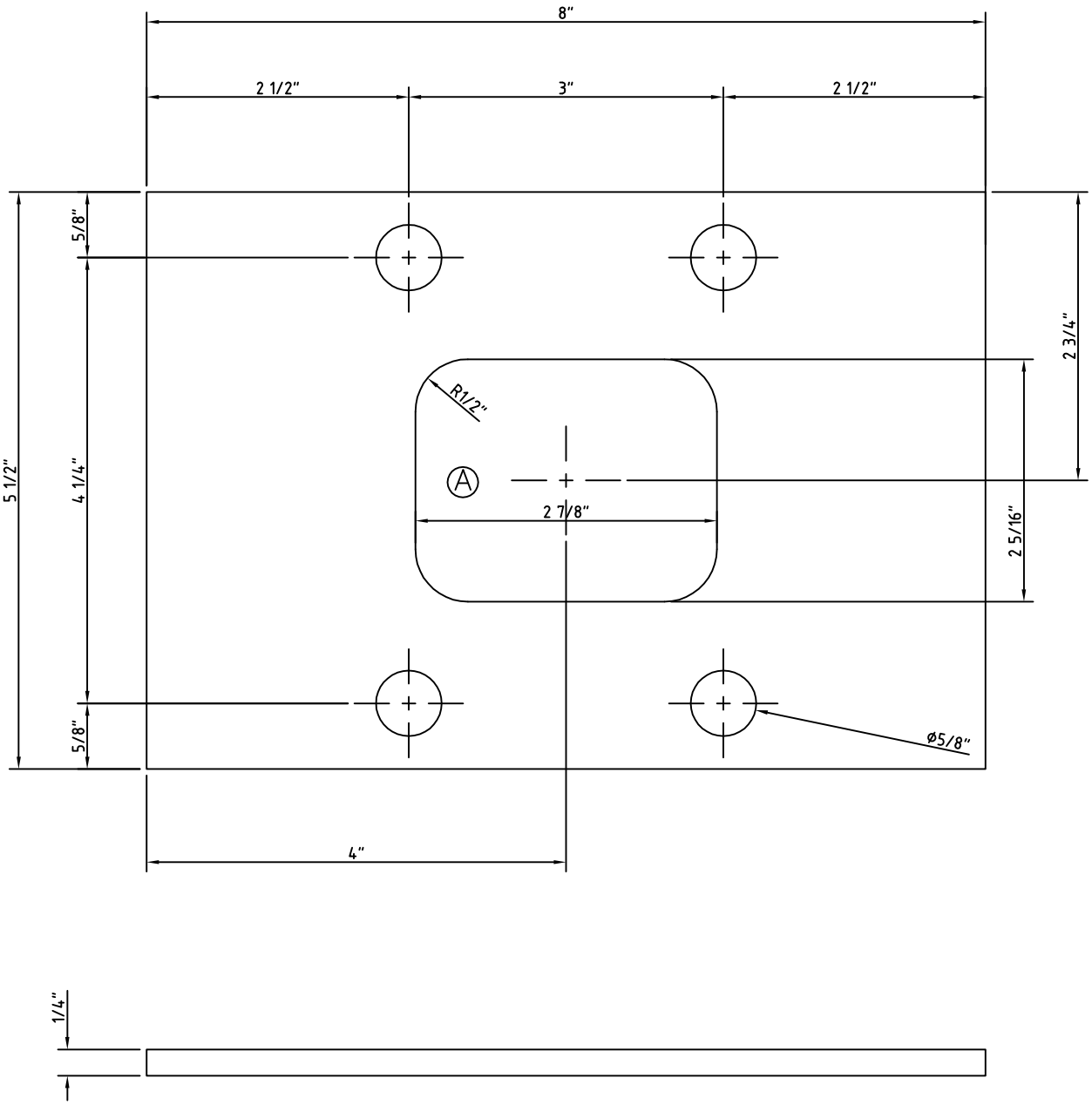

A

WHIPPS INC. PART No.	MATERIAL	QUANTITY	WEIGHT. EACH	MANUFACTURING . TIME EACH
101-1	STAINLESS STEEL GRADE 304		3.25 lbs	6.0 MIN.
101-2	STAINLESS STEEL GRADE 316		3.25 lbs	6.0 MIN.

TITLE YOKE ADAPTER TOP PLATE TYPE 101 OPERATOR

DATE	SCALE	DWN BY	APPR BY
12/23/03	1:1	CG	

DRAWING NO. ST-100-005

S.O. NO.

TOLERANCES

MATERIAL:

DATE	SYM	REVISION RECORD	AUTH	DR
10/13/04	B	REVISED NOTES & HOLE SIZE		GW
2/4/04	A	8" WIDE		CG

WHIPPS inc. 370 SO. ATHOL RD. ATHOL, MA 01331

Stainless Steel Gates

Series 900 AWWA® C561 Compliant

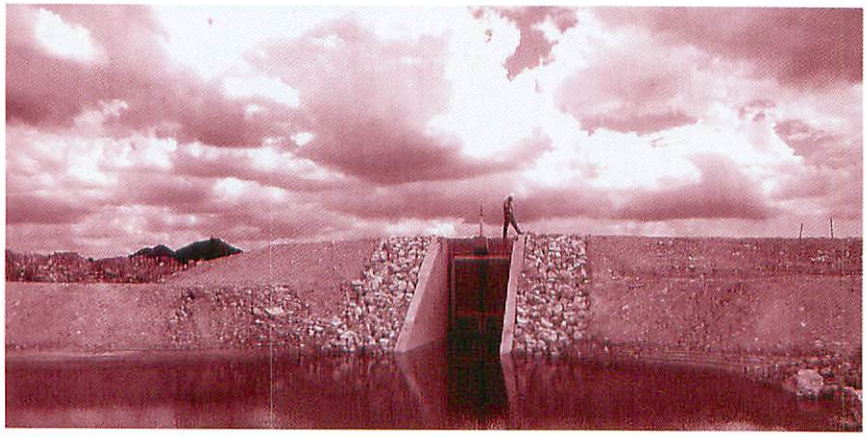

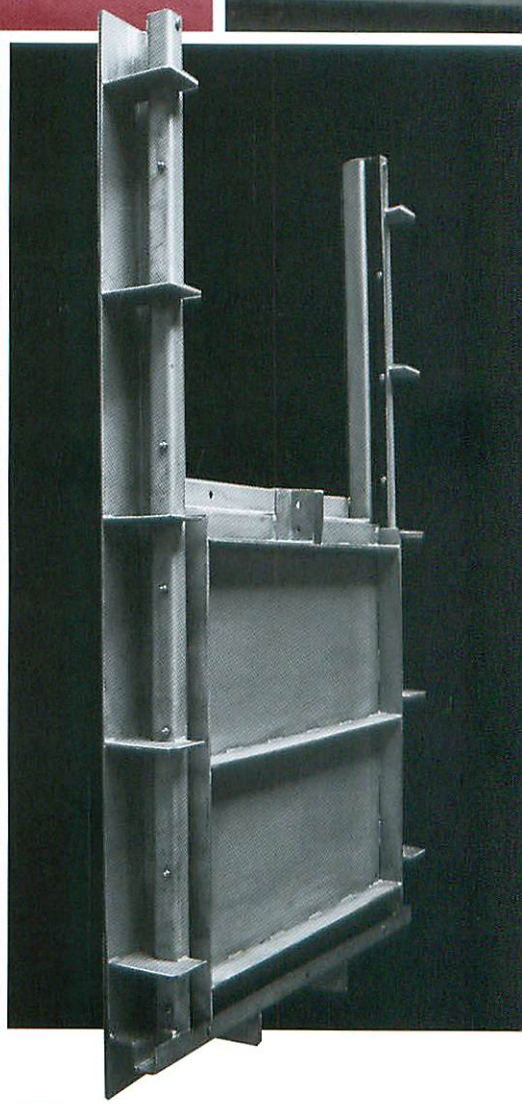

Whipps, inc.

Manufacturing high quality gates since 1977

Whipps, inc.

Manufacturing high quality gates since 1977

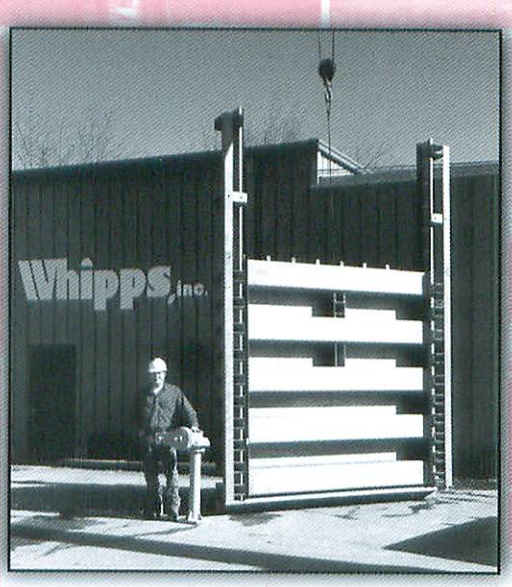

Whipps, inc.

Stainless Steel Gates

Series 900 AWWA® C561 Compliant

Contents

Copyright ©2008 Whipps, Inc.

Introduction

Series 900 Stainless Steel Gates offer high performance and long life in designs which accommodate a wide range of mounting arrangements and flow conditions. Rugged, reinforced stainless steel construction is combined with tough, flexible ultra high molecular weight polyethylene (UHMW) seat/seals, to provide a heavy-duty assembly. Flush bottom closure is provided by a resilient bottom seal. In addition to the wide range of standard gates, Whipps, Inc. can quickly and economically produce standard gates or gates customized for unusual applications.

Advantages (vs. Cast Iron Gates)

Superior Performance: Whipps, Inc. guarantees lower leakage than that listed in AWWA C-501 - Cast Iron Sluice Gates or the latest revision, AWWA C-560 - Cast Iron Slide Gates. Whipps, Inc. will guarantee leakage of no more than 0.05 gpm/ft of seal perimeter in seating head and unseating head conditions. Including high head service.

Cost: Fabricated stainless steel gates almost always cost less than cast iron gates. As the size of the gate increases, the price difference increases. This is due to the manufacturing process (e.g. casting of parts and subsequent machining) required to produce cast iron gates.

Strength: The ultimate strength of stainless steel is in excess of twice the ultimate strength of cast iron and stainless steel has approximately twice the modulus of elasticity of cast iron.

Durability: Stainless steel resists corrosion better than cast iron. The uv stabilized UHMW seat/seals that are utilized on our stainless steel gates are field proven to maintain shape and integrity in demanding applications. Whipps, Inc. tested the UHMW seat/seals to confirm the ability to withstand continuous operation in an abrasive environment. The testing consisted of 25,000 gate open/close cycles in an abrasive media while experiencing only negligible wear. (Test results available upon request.)

Reliability: Unlike traditional cast iron gates, the slide will not "freeze" to the frame after long periods of inactivity. Whipps, Inc. stainless steel gates incorporate UHMW seat/seals to prevent any metal-to-metal contact between the slide and the frame.

Delivery: The fabrication process required to turn raw materials into a stainless steel gate is quicker than the casting and machining process required to turn raw materials into a cast iron gate.

Self-Adjusting Seals: The Series 900 stainless steel gates have a self-adjusting seal system that completely eliminates the need for field adjustment. This seal system was developed with the understanding that many gates are installed in locations where field adjustment of wedges is not practical or possible. Another drawback to a wedged system is that wedge adjustment is an inexact science. Wedge adjustment when attempted by inexperienced personnel can lead to additional leakage, difficult gate operation and increased localized gate stresses. The self-adjusting seal system is a combination of durable UHMW seat/seals and a resilient static spring/seal. The UHMW seat/seals are shaped to form a low friction, yet tight, seal with the slide. The spring/seal serves two main purposes: First; it acts as a bulb seal between the frame and the UHMW seat/seals,

Advantages (continued)

and secondly; it acts as a "spring" to ensure continuous contact between the UHMW seat/seals and the slide. The spring/seal is stationary, similar to an O-ring seal, and it is protected from wear or damage from the movable slide by the UHMW seat/seals. (Wedges can be provided on our Series 900, but they are not recommended since they do not improve the performance of our gate.)

Low Maintenance: Stainless steel gates do not require periodic painting, and require less operator attention compared to cast iron gates.

Ease of Repair: In the unusual event that the seat/seals are damaged, they can be replaced in the field with common tools. The gate does not have to be removed from the wall. If the seating surface on a cast iron gate is damaged, the gate will have to be removed from the wall and shipped back to the manufacturer for re-manufacture.

Range of Sizes: The process to design and manufacture fabricated gates allows for a nearly unlimited range of sizes. This is not the case with cast iron gates since new patterns or modifications to existing patterns are required to accommodate unusual sizes.

Mounting Configurations: Gate frames may be embedded in the channel walls, mounted to a wall with anchor bolts, mounted to a pipe flange, or wall thimble. Wall thimble mounting is possible although it is usually only necessary for applications with high unseating heads. Gates can also be designed to mount to existing wall thimbles or existing pipe flanges. Flanged frames or flat frames are available for gates to cover square, rectangular or round openings in concrete structures.

Design Features

The following chart shows the gate features indicated by each model number. These models represent the most commonly used configurations.

Additional arrangements are available for applications which cannot be served by these standard models.

GATE FEATURES		GATE MODEL NUMBERS							
		921 951 –	923 953 –	923-C 953-C –	923-D – –	923-D-I 953-D-I –	924 954 –	925 955 975	– 955-I –
GUIDE FRAME STYLE	Embedded	X							
	Wall Mount		X		X	X	X	X	X
	Channel Mount			X					
SEALS	Side & Invert	X	X	X	X	X			
	Side, Invert & Top						X	X	X
ACTUATOR MOUNTING	Yoke	X	X	X	X	X	X		
	Pedestal							X	X

Optional Features

Gate size and service conditions determine the gate configuration required for each application. Overall gate widths, side frame sections and invert sections shown in this literature illustrate only a few of the many configurations available.

Downward Opening: Most gate models can be specified for downward opening service by adding a "D" to the model number. Such gates are used where there is insufficient clearance to open an upward opening gate or where the gate is to be used as an overflow weir. Downward opening gates may be furnished with or without a top seal.

Interconnected Actuators: All models may be specified with two interconnected actuators by adding "I" to the model number. This arrangement is generally recommended for gates 72" or wider and having a width greater than twice the height.

Non-Rising Stems: All models may be specified with non-rising stems by adding "N" to the model number. This operating stem arrangement is normally selected for installations with low headroom.

Wall Thimbles: All models with top seals can be specified for wall thimble mounting. Thimbles are typically only necessary for applications that experience high unseating heads.

Gate Selection Criteria

Gate Size: In water and wastewater treatment plants, gates are most often sized to fit a pre-designed structure. In this regard, Whipps, Inc. stainless steel gates offer great flexibility to accommodate any round, square or rectangular opening.

Gate Mounting: Series 900 gate frames may be embedded in the channel walls, mounted on the face of a wall, on the inside of an existing channel, on a wall thimble or on a pipe flange.

Gate Material: Series 900 gates are typically constructed of either type 304/304L or type 316/316L stainless steel. Type 304/304L is less expensive and generally it may safely be specified for water or waste water applications if residual chlorine is 2mg/l or less. Type 316/316L is a more conservative choice and provides greater resistance to pitting and crevice corrosion. In either case, the low carbon ("L") grade should be used for welded parts to reduce carbon precipitation in the welds. Different alloys are also available. Please consult the factory.

Actuator Selection: The various types of actuators are shown in the actuator section. Operating loads are calculated as shown on the adjacent page. Manual operators should be selected to provide the calculated operating thrust with no more than 40 pounds effort on the handwheel or handcrank. (For information regarding the selection of powered actuators, consult the factory.)

Gate Selection Criteria (continued)

In either units, the operating load is taken as the greater of P_1 and P_2:

	ENGLISH UNITS	METRIC UNITS
1.	$P_1 = 35\,h$ where P_1 = operating load (pounds) h = gate height (inches)	$P_1 = 6129\,h$ where P_1 = operating load (newtons) h = gate height (meters)
2.	$P_2 = 12.48\,AH$ where P_2 = operating load (pounds) A = area of opening (sq. feet) H = head on gate centerline (feet)	$P_2 = 1961\,AH$ where P_2 = operating load (newtons) A = area of opening (sq. meters) H = head on gate centerline (meters)

NOTE: *Maximum operating loads are encountered during the first few inches of gate travel during opening and the last few inches of gate travel during closing. Loads diminish quickly from these extremes.*

Actuator loads transmitted to structures: On non-self contained gates, the stem thrust of pedestal mounted actuators is resisted by the structure supporting the gate and actuator. The structure must be designed to resist the maximum output of the actuator (e.g., electric actuator at motor stall) which is necessarily greater than the operating load, sometimes much greater. Powered actuators use various devices to limit maximum output. However, the maximum output of manual actuators is only limited by the operating personnel's effort.

Application Chart

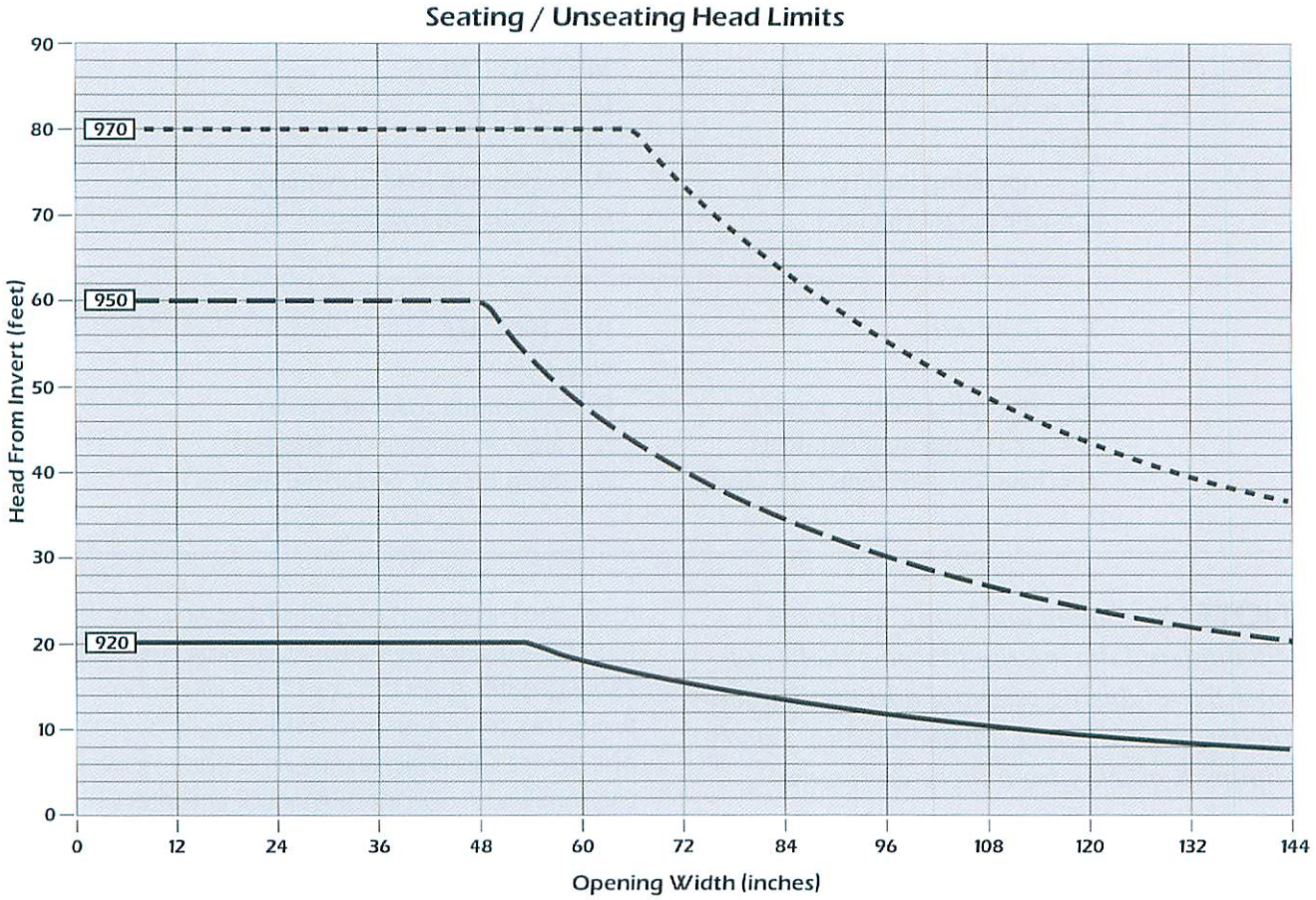

NOTE: *The chart shown above illustrates the normal maximum range of each stainless steel gate series. Higher ratings for each series can be achieved when necessary. Consult factory for details.*

Sluice Gate Mounting

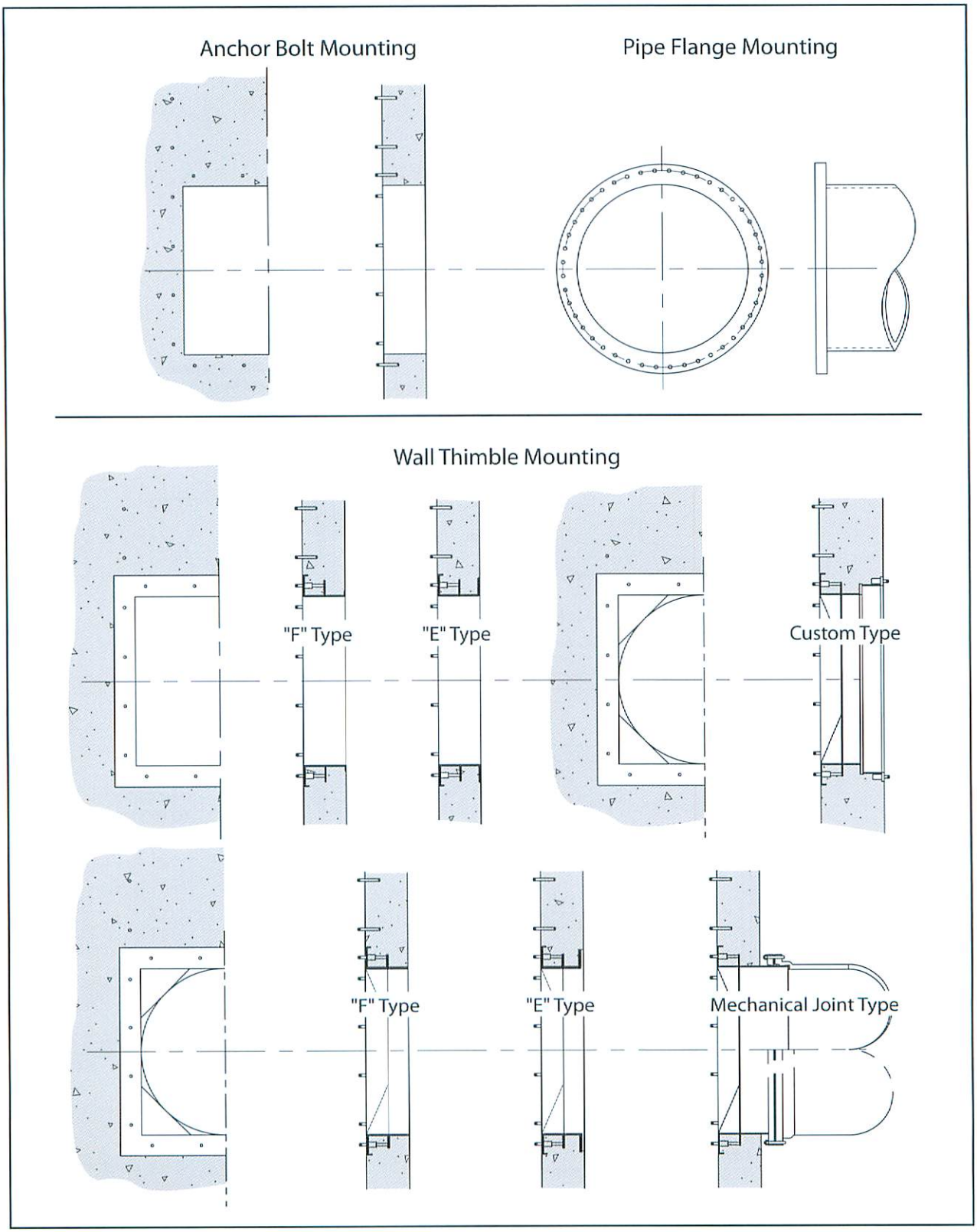

Model 921 Slide Gate

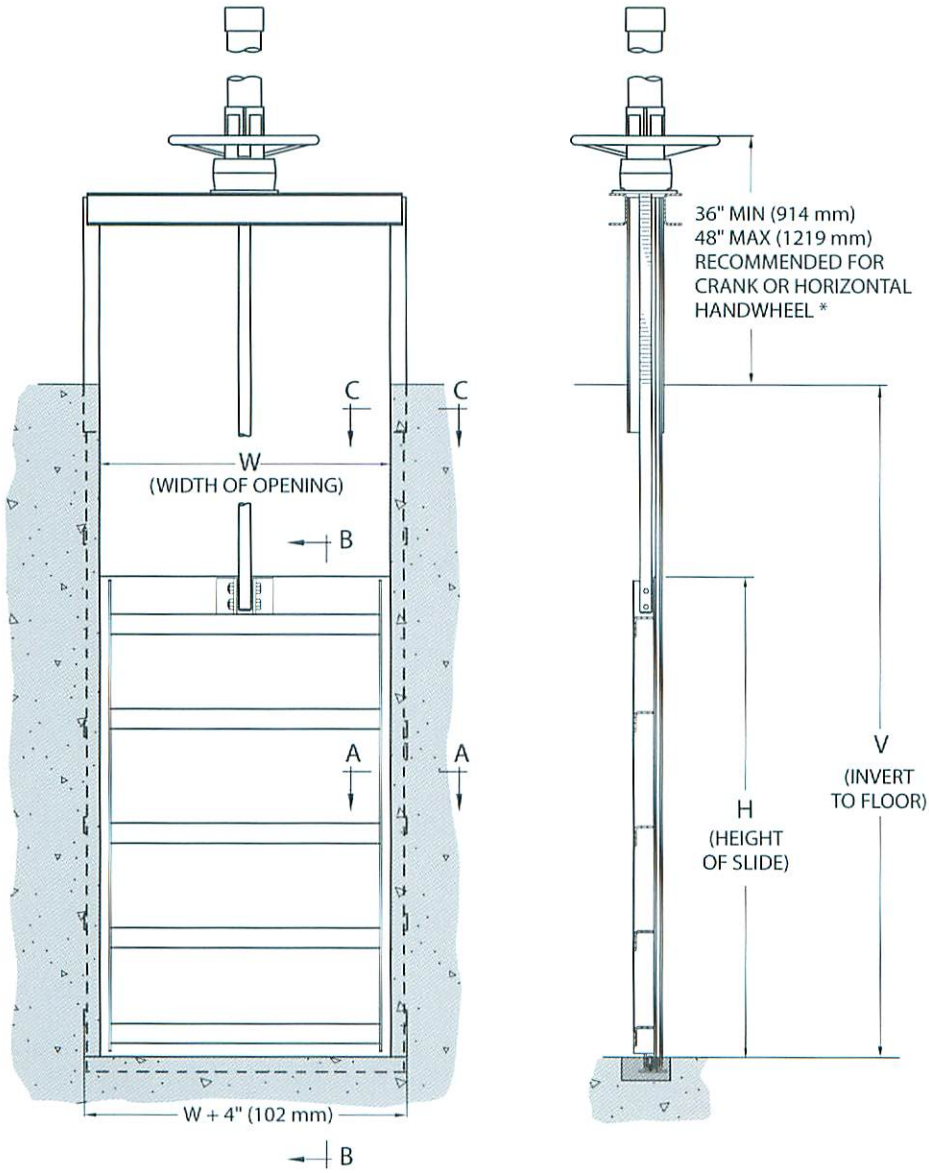

GATE ILLUSTRATED : 36" (W) x 60" (H) x 84" (V)
* SEE ACTUATORS SECTION FOR OTHER ARRANGEMENTS

Model 921 Features

- UHMW SEAT/SEALS
- LEAKAGE 1/2 OF AWWA C-561
- EMBEDDED FRAME
- OPEN CHANNEL - NO TOP SEAL
- YOKE MOUNTED ACTUATOR
- RESILIENT INVERT SEAL (FLUSH BOTTOM CLOSURE)

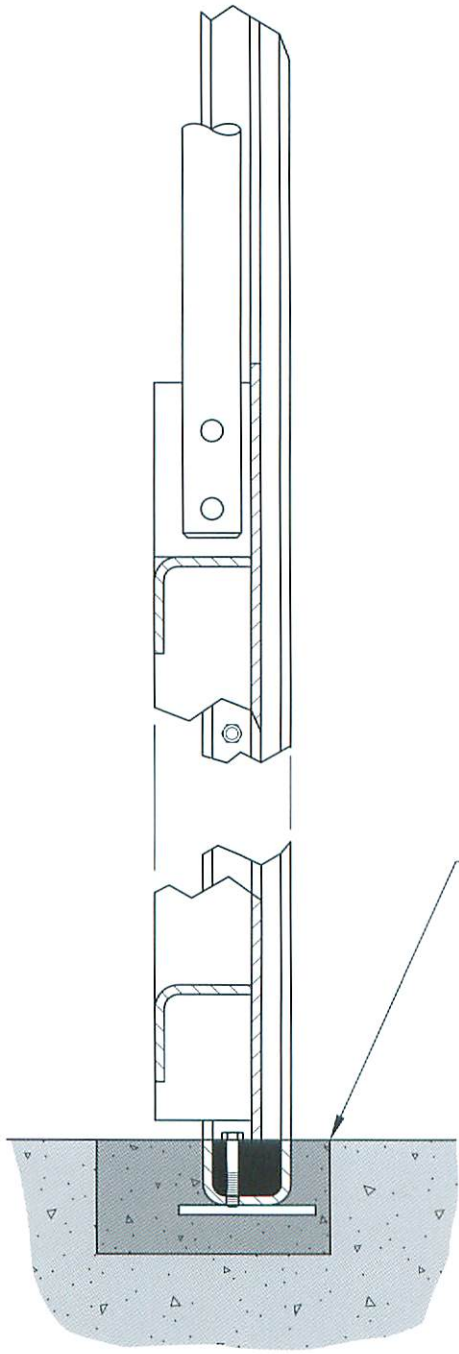

SECTION B-B

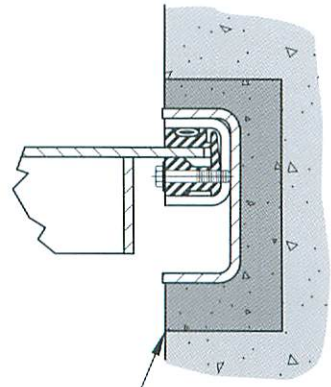

SECTION C-C

3" x 6-1/2"
(76 mm x 165 mm)
TYPICAL BOX-OUT

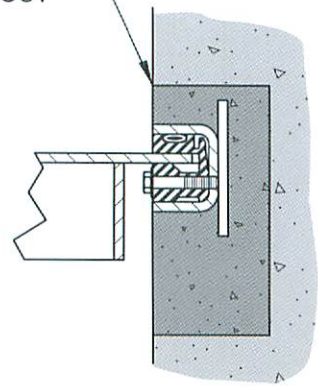

SECTION A-A

Model 923 Slide Gate

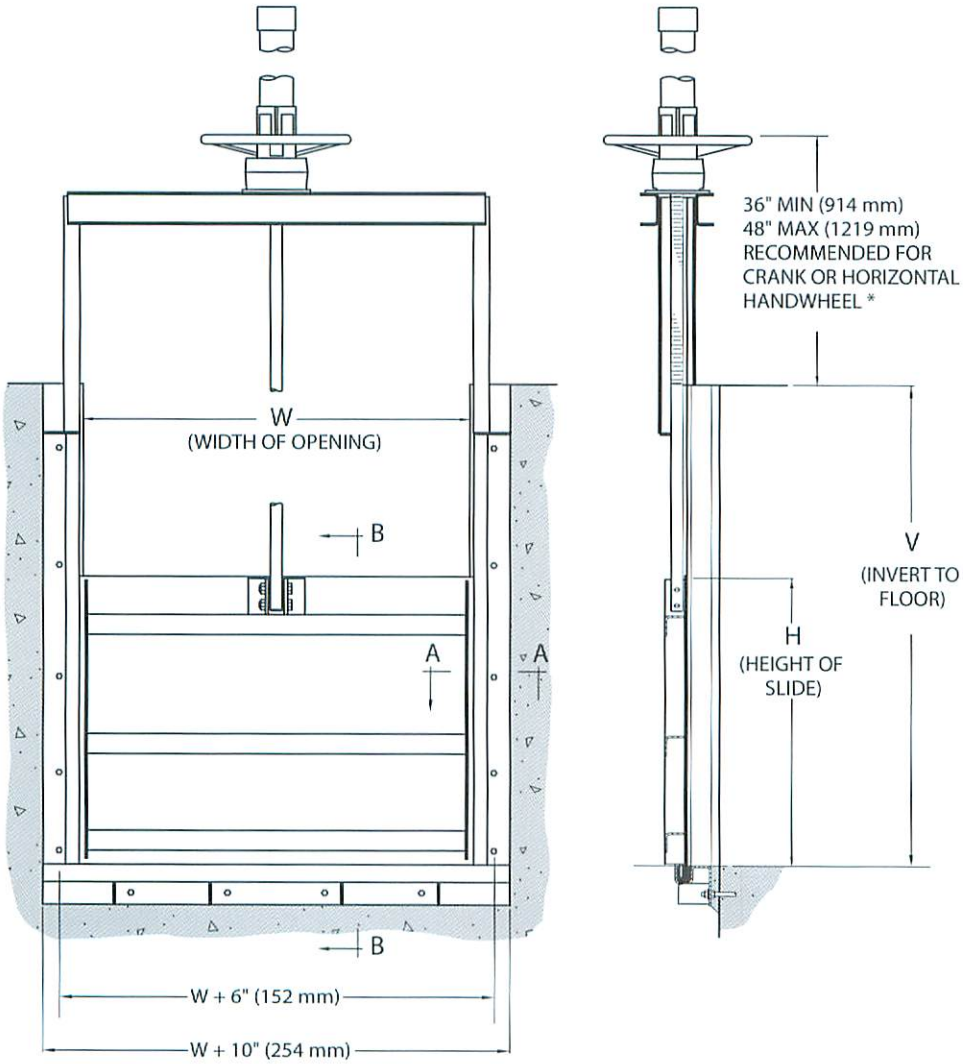

GATE ILLUSTRATED : 48" (W) x 36" (H) x 60" (V)
* SEE ACTUATORS SECTION FOR OTHER ARRANGEMENTS

Model 923 Features

- UHMW SEAT/SEALS
- LEAKAGE 1/2 OF AWWA C-561
- WALL MOUNTED SIDE FRAMES
- OPEN CHANNEL - NO TOP SEAL
- YOKE MOUNTED ACTUATOR
- RESILIENT INVERT SEAL (FLUSH BOTTOM CLOSURE)

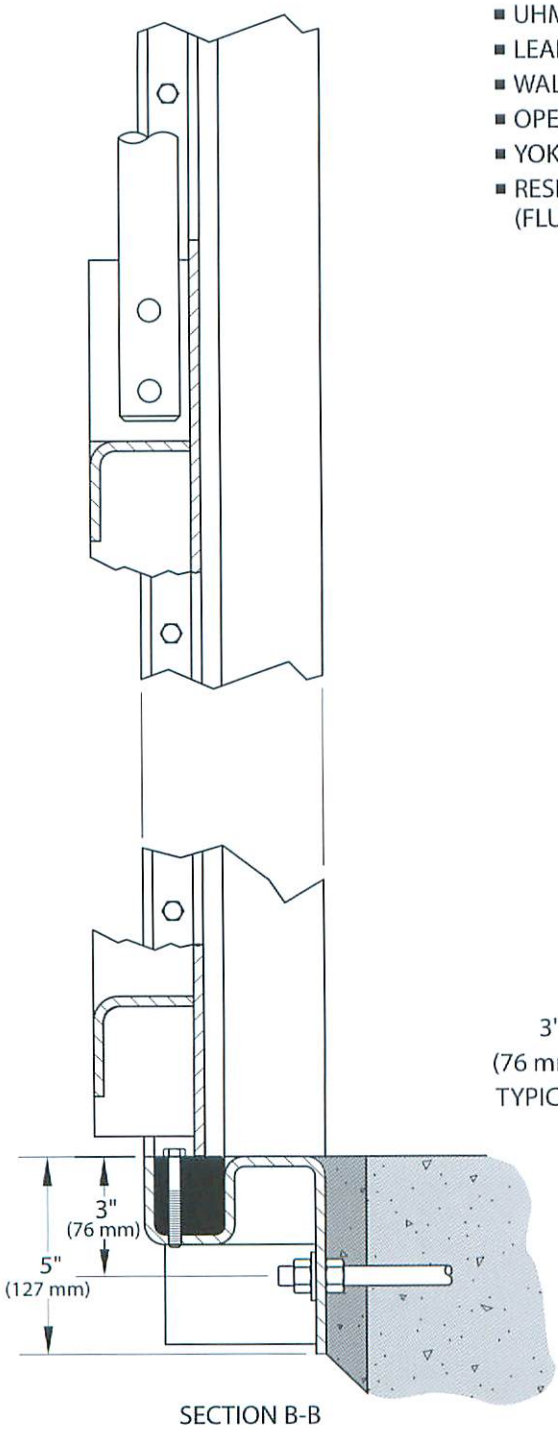

SECTION B-B

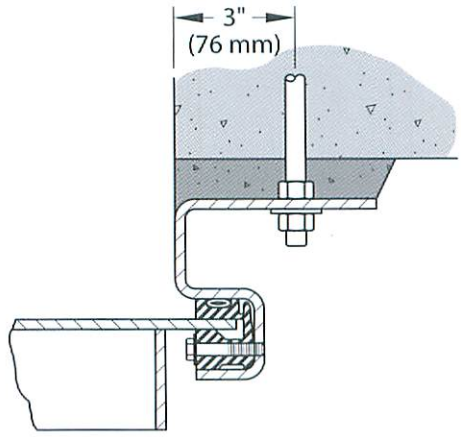

SECTION A-A

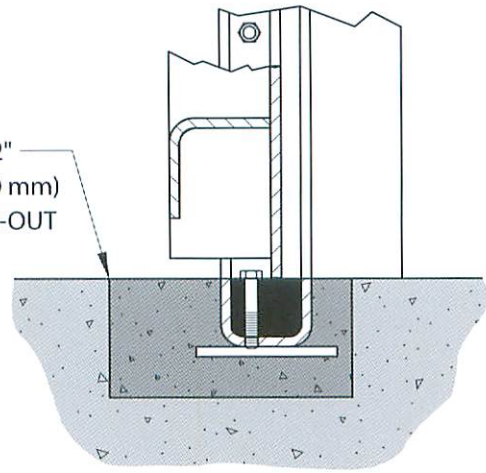

SECTION B-B
OPTIONAL EMBEDDED INVERT MEMBER

Model 923-C Slide Gate

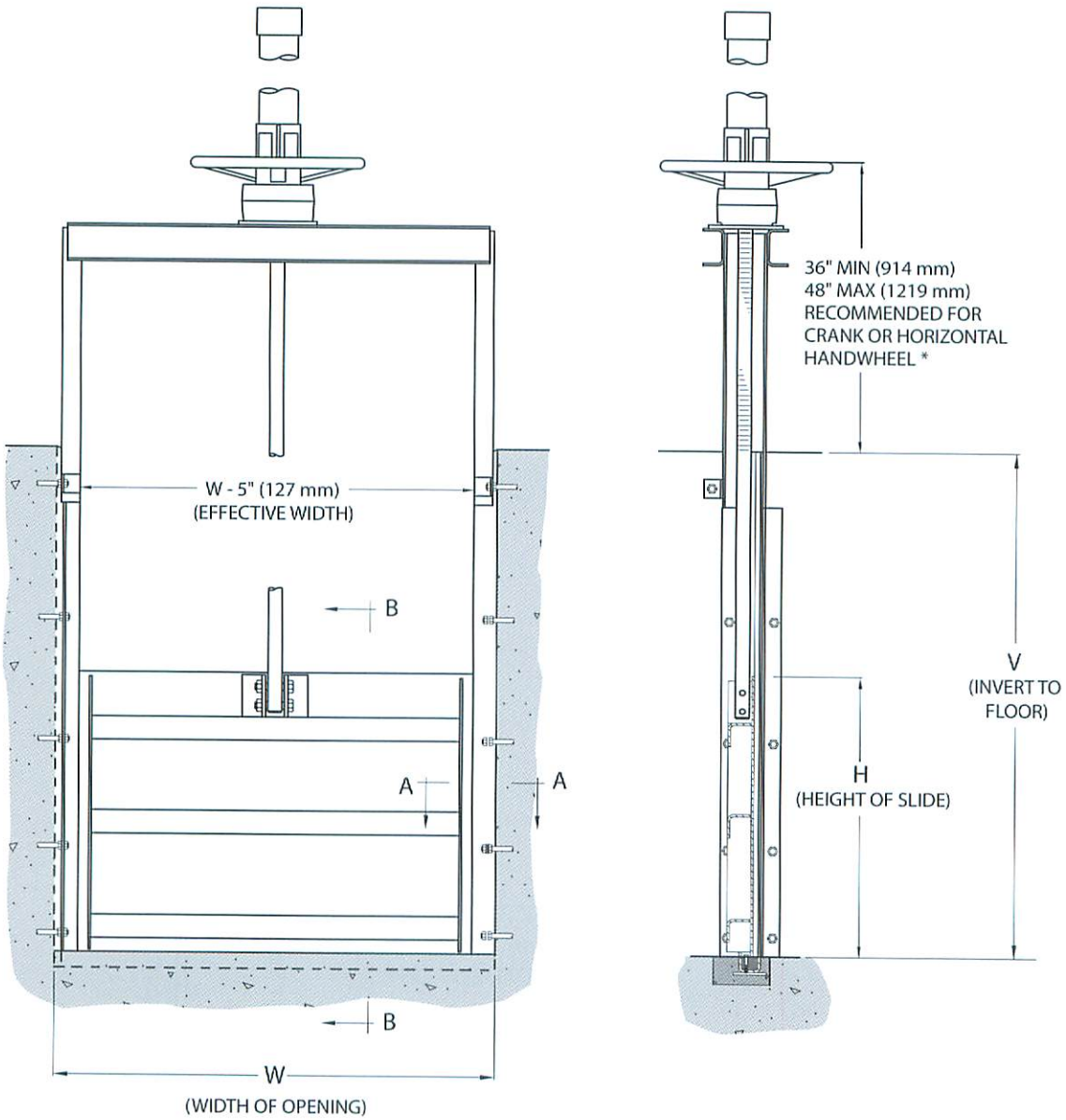

GATE ILLUSTRATED : 42" (W) X 30" (H) X 54" (V)
* SEE ACTUATORS SECTION FOR OTHER ARRANGEMENTS

Model 923-C Features

- UHMW SEAT/SEALS
- LEAKAGE 1/2 OF AWWA C-561
- FRAME MOUNTS IN EXISTING CHANNEL
- OPEN CHANNEL - NO TOP SEAL
- YOKE MOUNTED ACTUATOR
- RESILIENT INVERT SEAL (FLUSH BOTTOM CLOSURE)

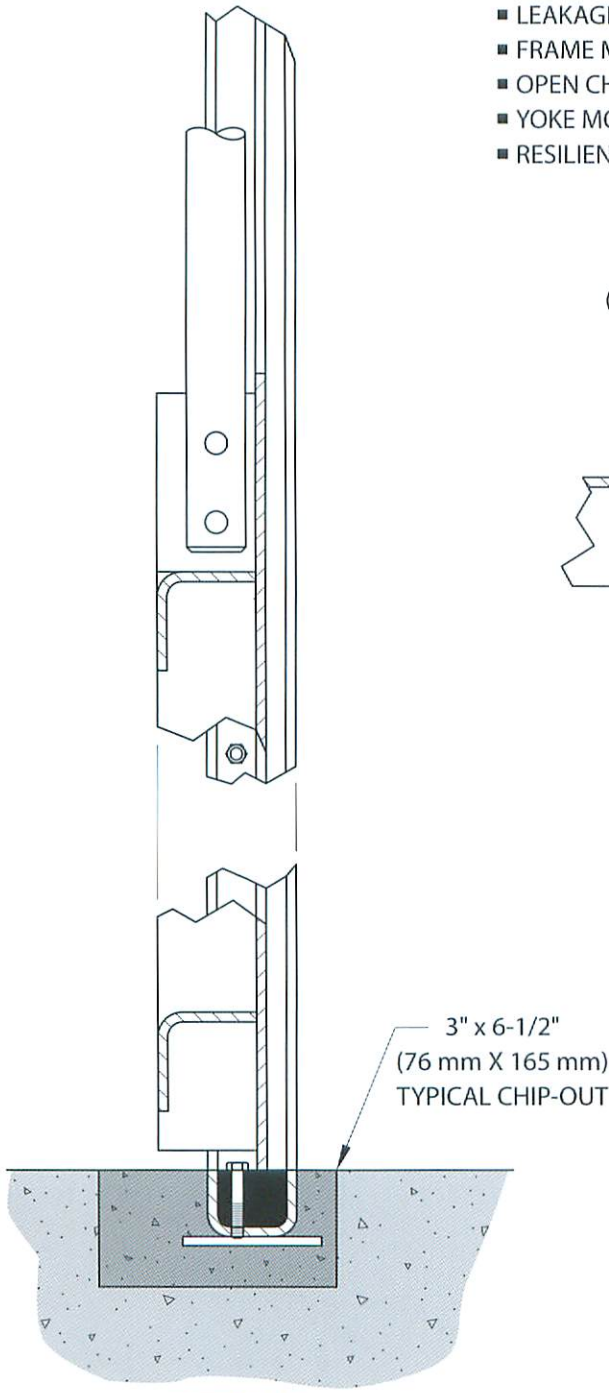

SECTION B-B

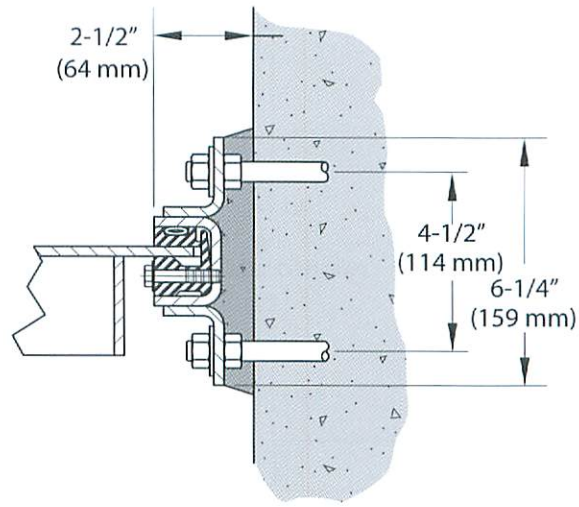

SECTION A-A

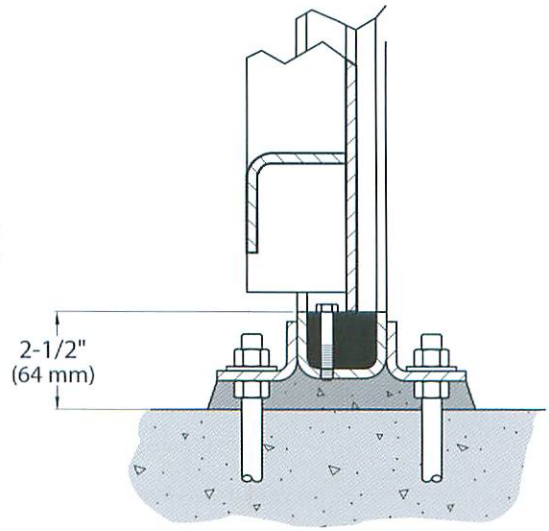

SECTION B-B
OPTIONAL SURFACE MOUNTED
INVERT MEMBER

Model 923-D Weir Gate

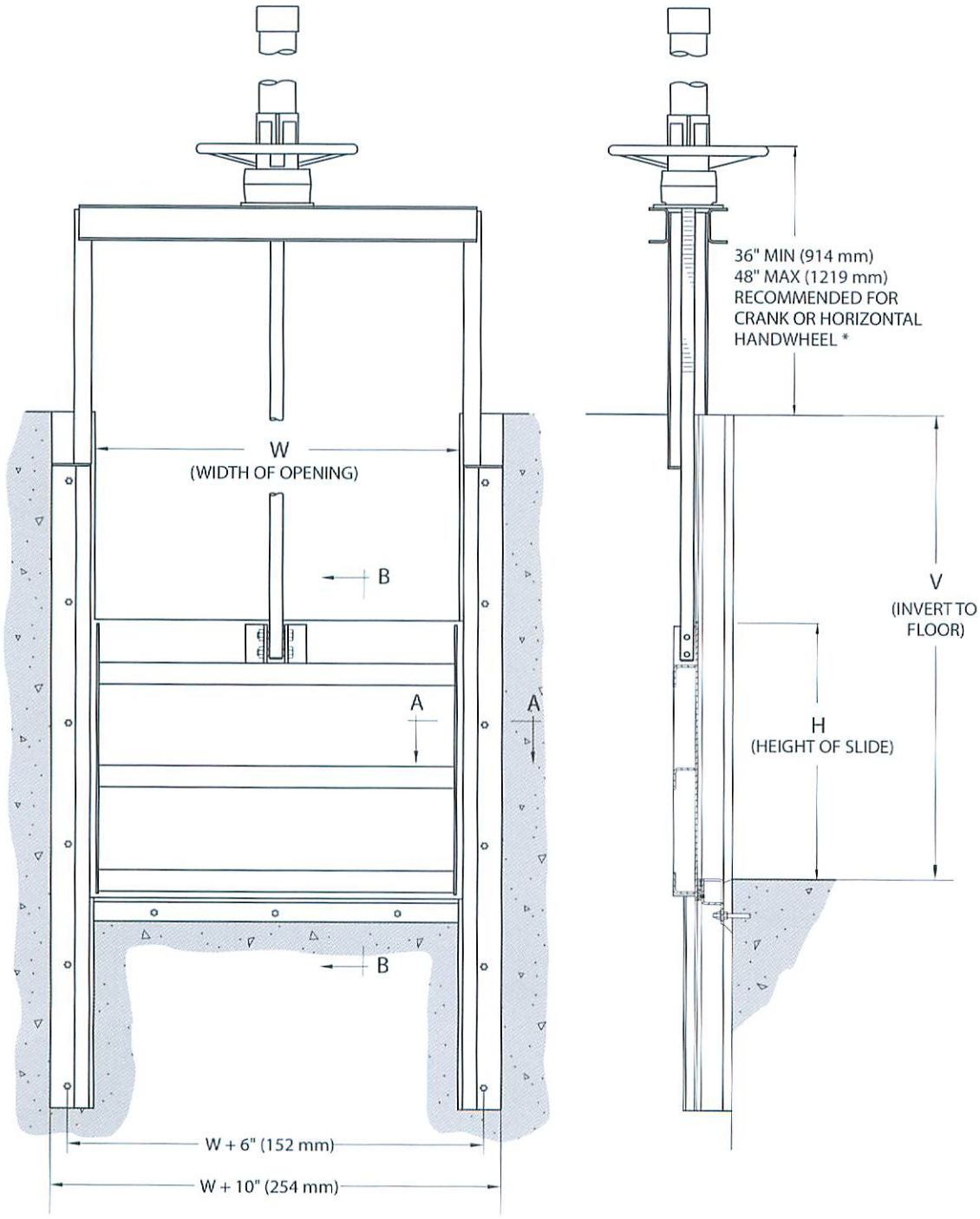

GATE ILLUSTRATED : 42" (W) x 30" (H) x 54" (V)
* SEE ACTUATORS SECTION FOR OTHER ARRANGEMENTS

Model 923-D Features

- UHMW SEAT/SEALS
- LEAKAGE 1/2 OF AWWA C-561
- WALL MOUNTED SIDE FRAMES
- DOWNWARD OPENING
- OPEN CHANNEL - OPTIONAL TOP SEAL
- YOKE MOUNTED ACTUATOR

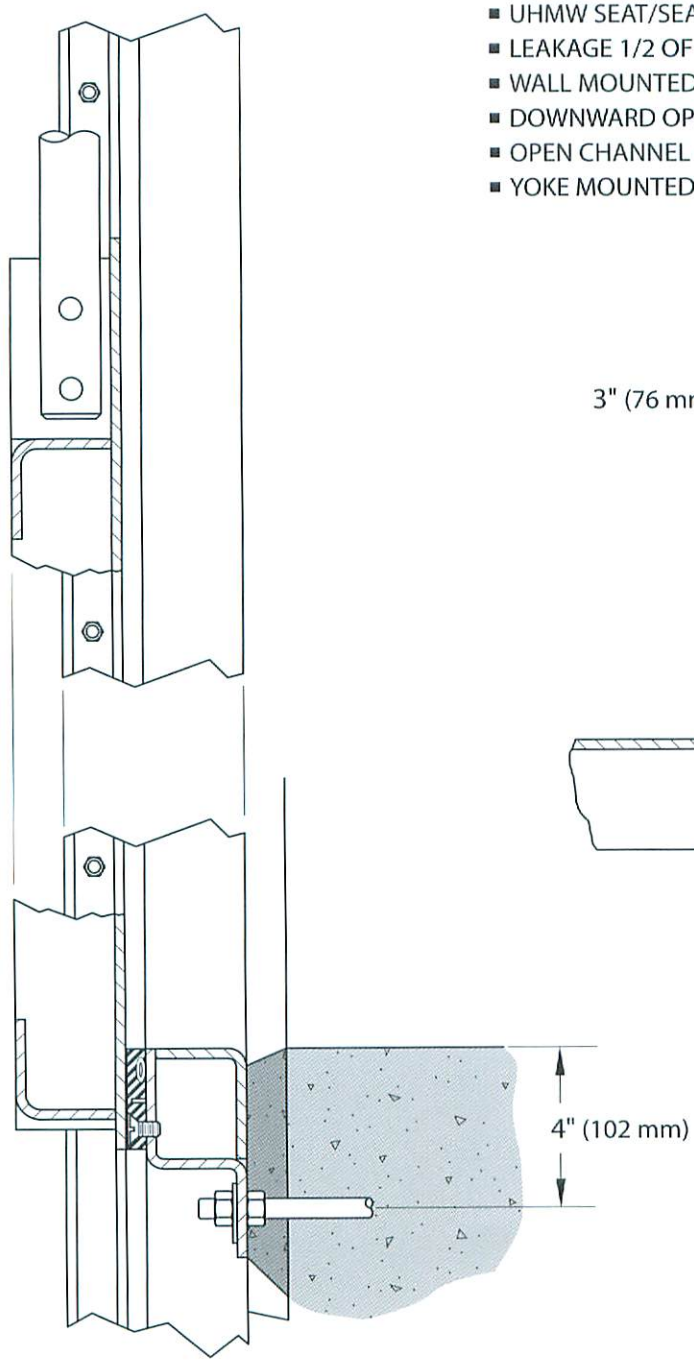

SECTION B-B

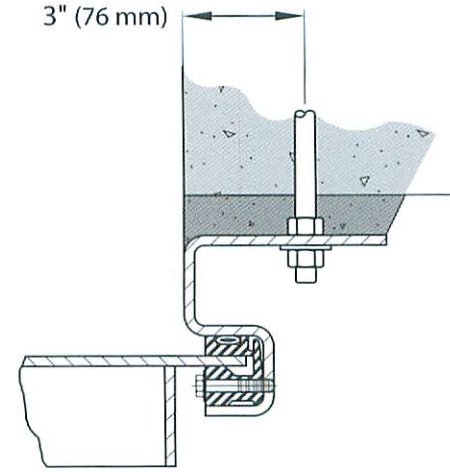

SECTION A-A

Model 923-D-I Weir Gate

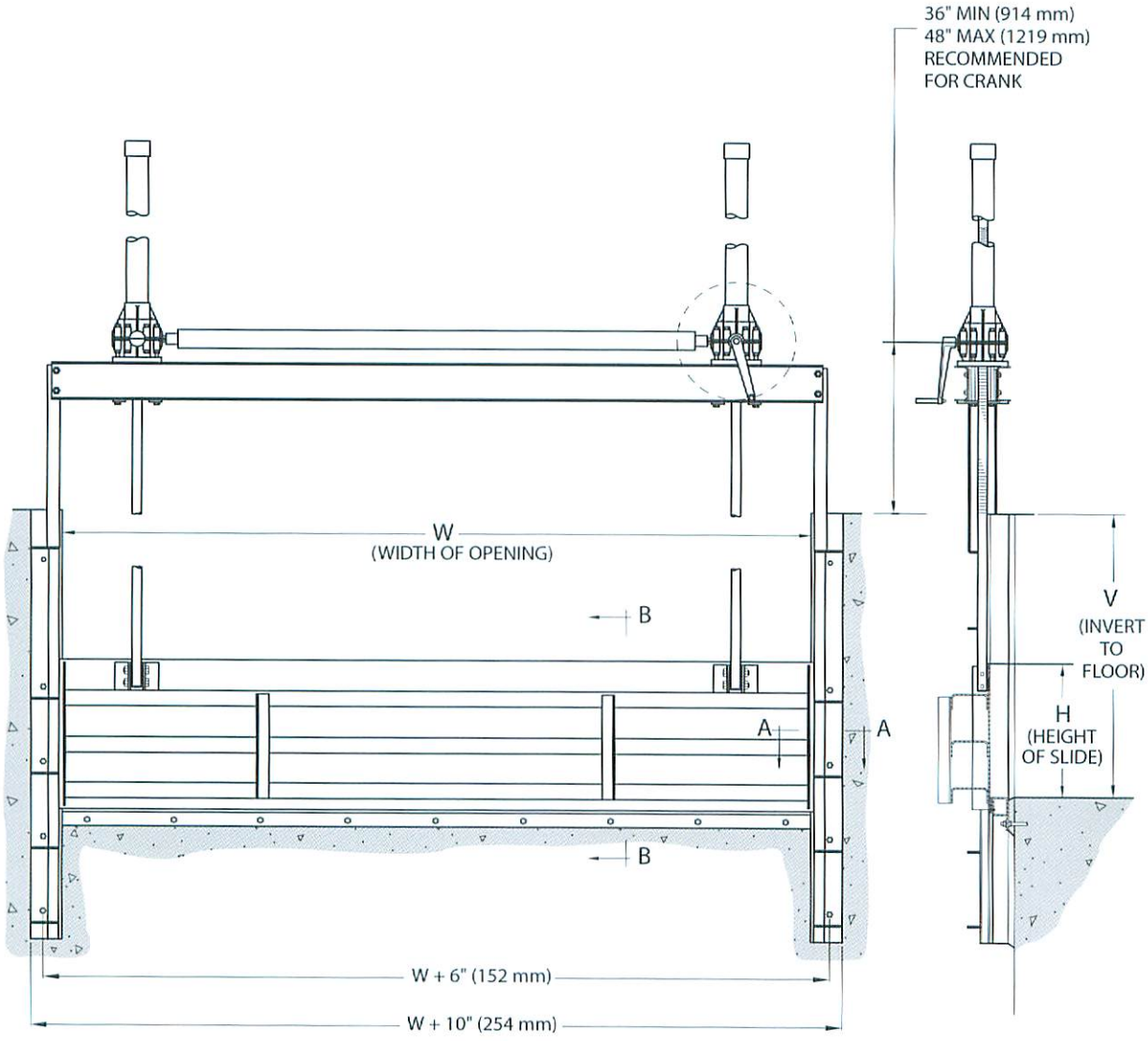

GATE ILLUSTRATED : 120" (W) x 24" (H) x 45" (V)
SEE ACTUATORS SECTION FOR OTHER ARRANGEMENTS

Model 923-D-I Features

- UHMW SEAT/SEALS
- LEAKAGE 1/2 OF AWWA C-561
- WALL MOUNTED SIDE FRAMES
- DOWNWARD OPENING
- OPEN CHANNEL - OPTIONAL TOP SEAL
- YOKE MOUNTED INTERCONNECTED ACTUATORS

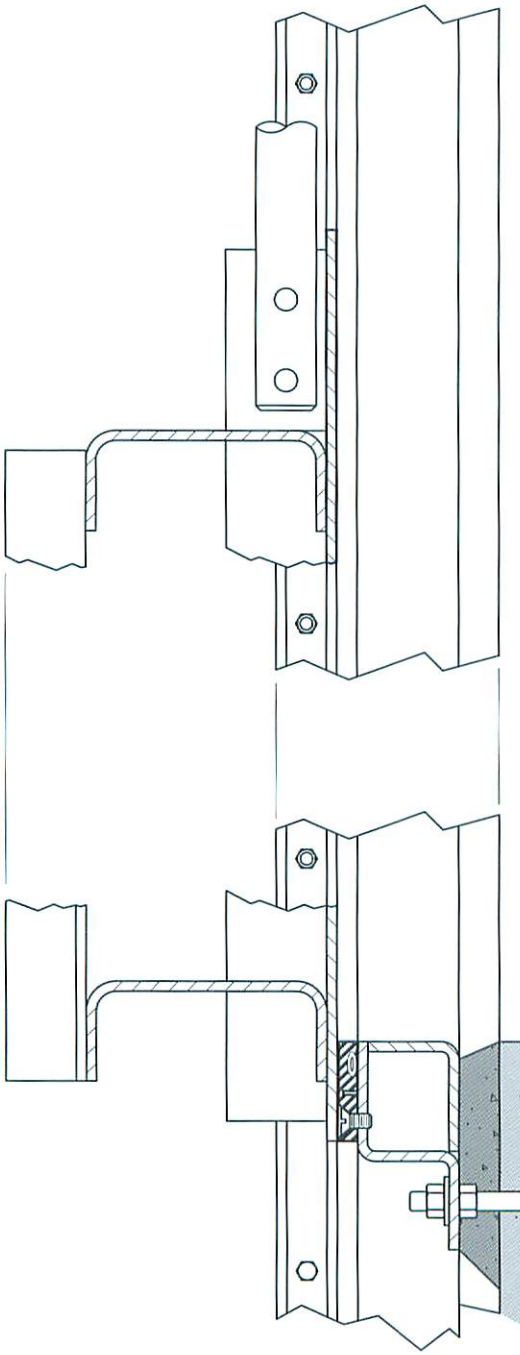

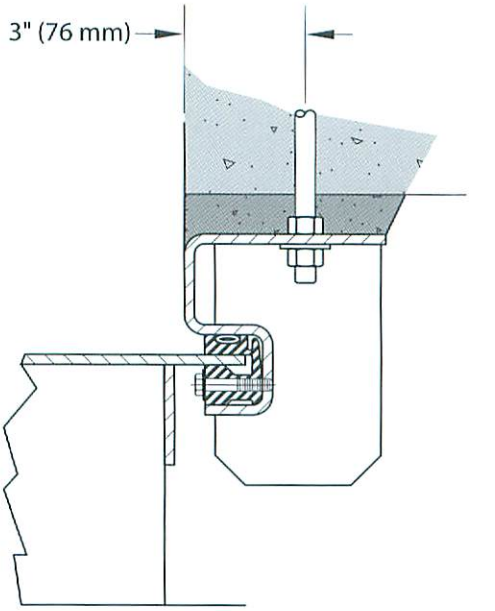

SECTION A-A

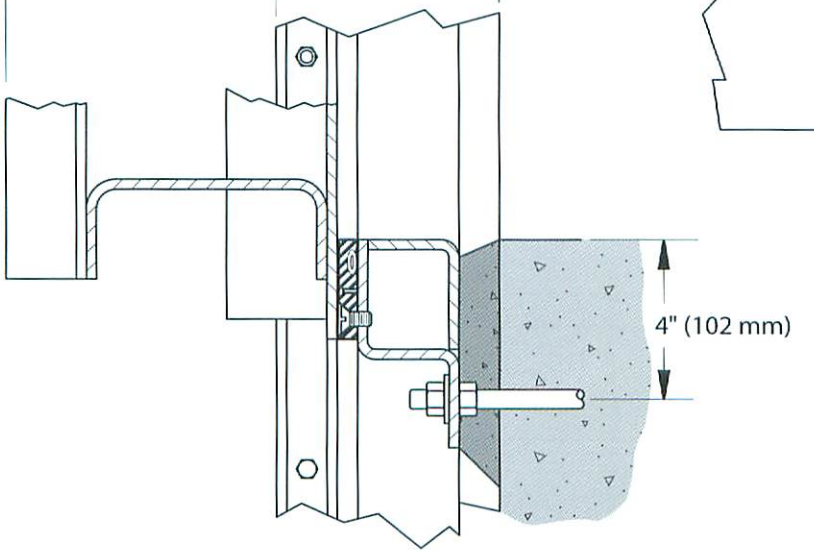

SECTION B-B

Model 924 Sluice Gate

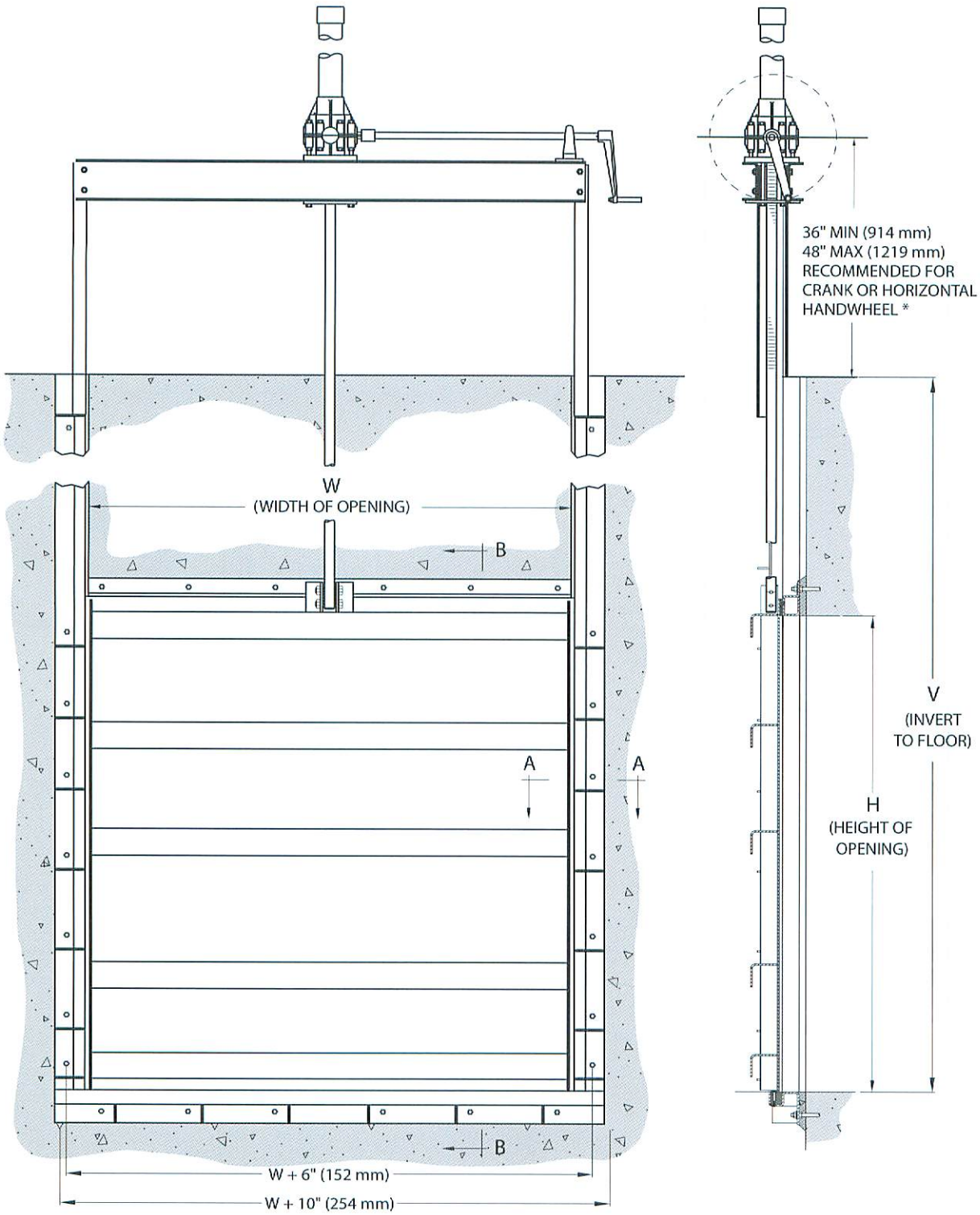

GATE ILLUSTRATED : 72" (W) x 72" (H) x 108" (V) * SEE ACTUATORS SECTION FOR OTHER ARRANGEMENTS

Model 924 Features

- UHMW SEAT/SEALS
- LEAKAGE 1/2 OF AWWA C-561
- WALL MOUNTED SIDE FRAMES
- YOKE MOUNTED ACTUATOR
- FULL APERTURE SEALING
- RESILIENT INVERT SEAL (FLUSH BOTTOM CLOSURE)

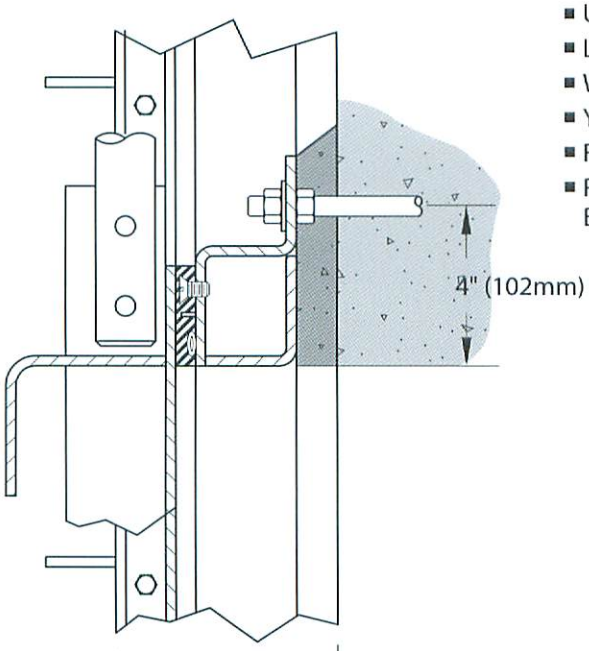

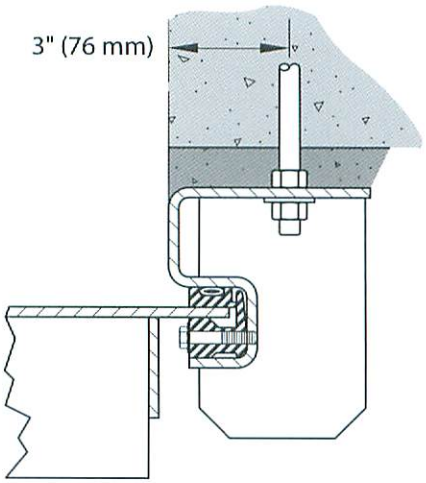

SECTION A-A

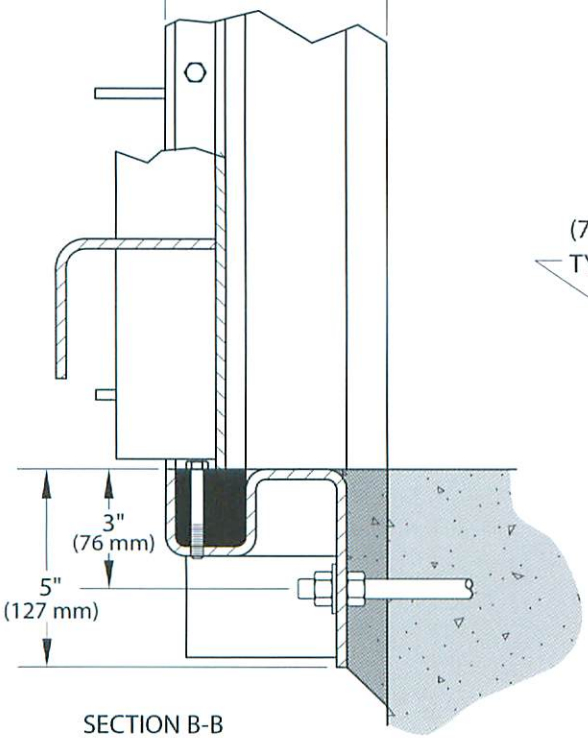

SECTION B-B

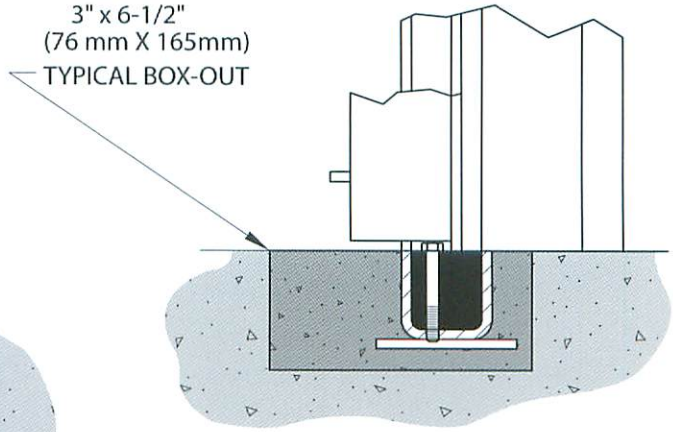

SECTION B-B
OPTIONAL EMBEDDED
INVERT MEMBER

Model 925 Sluice Gate

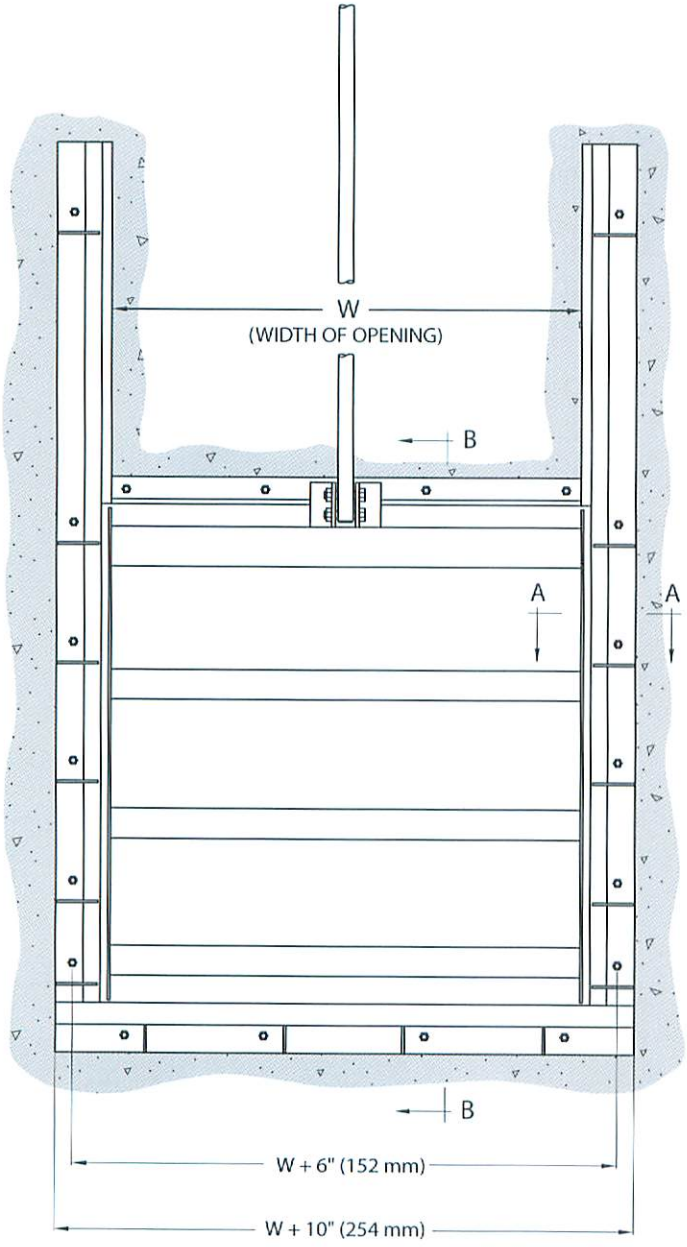

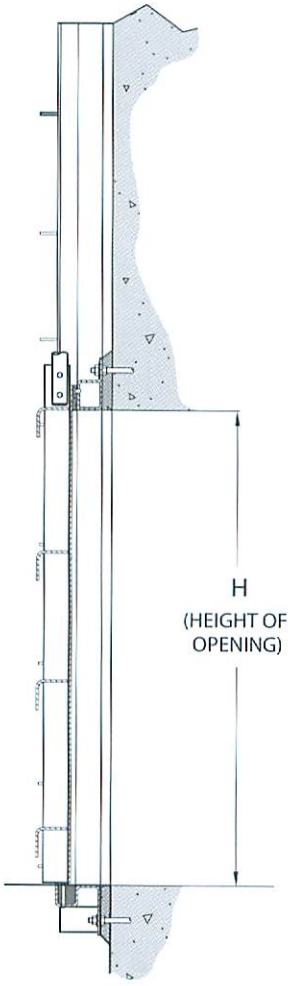

GATE ILLUSTRATED : 48" (W) x 48" (H)
SEE ACTUATORS SECTION FOR OPERATING OPTIONS

Model 925 Features

- UHMW SEAT/SEALS
- LEAKAGE 1/2 OF AWWA C-561
- WALL MOUNTED SIDE FRAMES
- PEDESTAL, WALL BRACKET OR FLOOR BOX MOUNTED ACTUATOR
- FULL APERTURE SEALING
- RESILIENT INVERT SEAL (FLUSH BOTTOM CLOSURE)

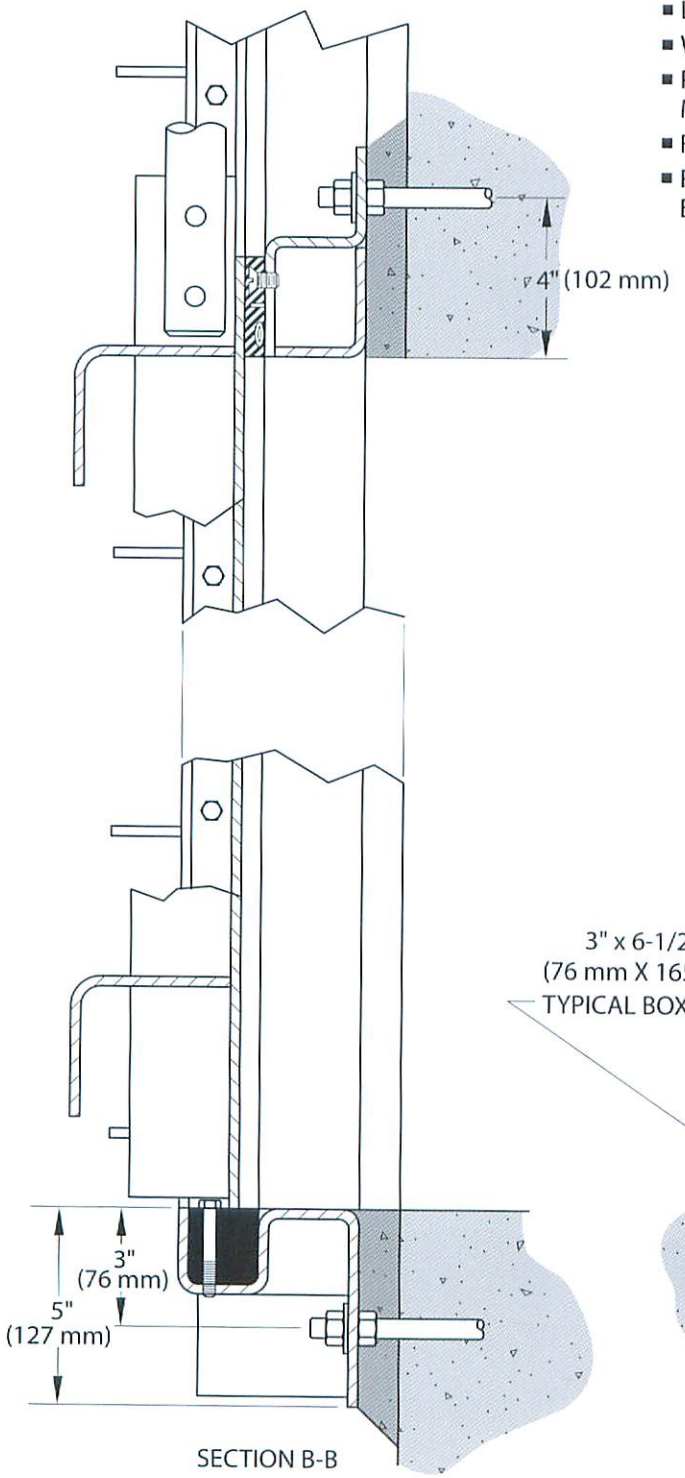

SECTION B-B

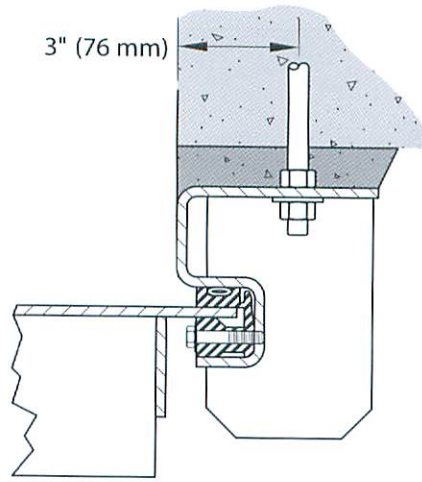

SECTION A-A

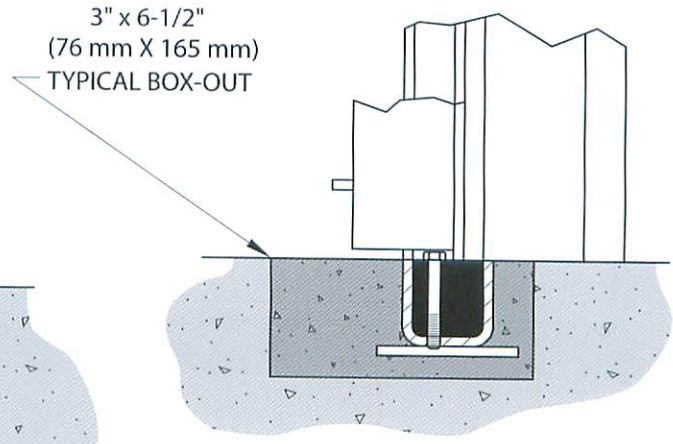

SECTION B-B

OPTIONAL EMBEDDED INVERT MEMBER

Actuators – Self Contained Gates

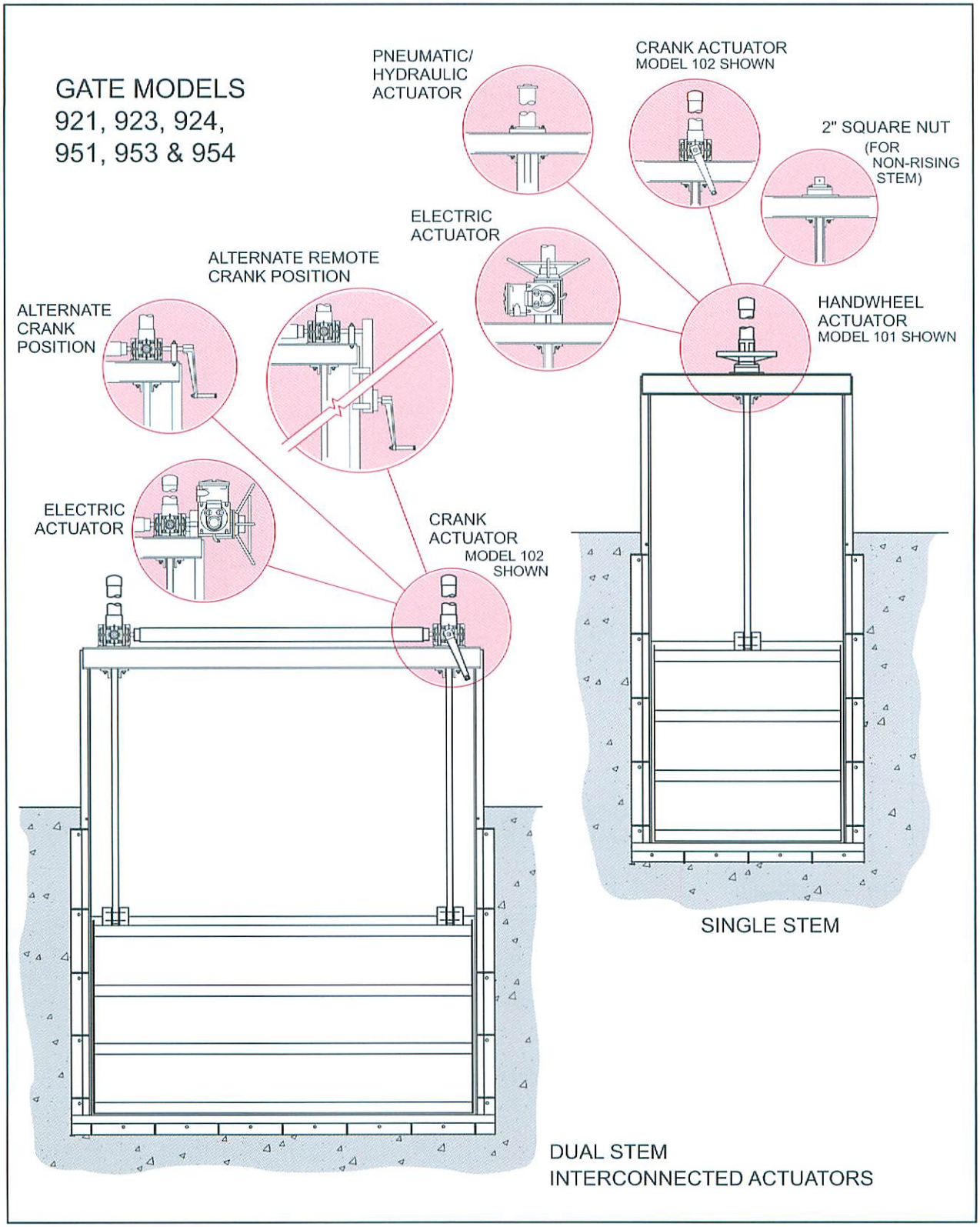

Actuators – Non-Self Contained Gates

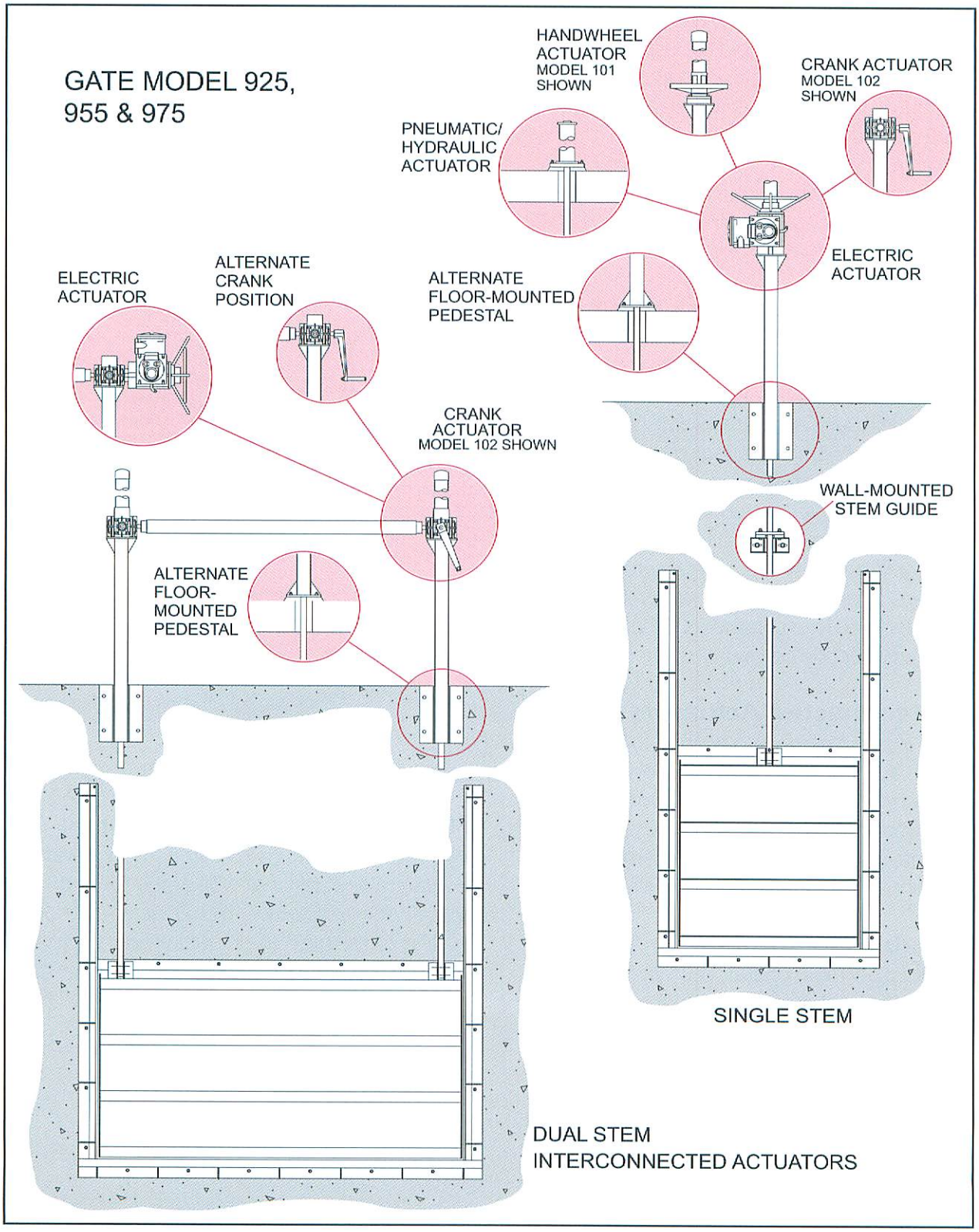

Actuators — General Information

Manual Actuators: Manual actuators (handwheel or crank type) are used where operating loads are relatively low, where operation is infrequent or where electric power is unavailable.
The term "handwheel type" is used to denote an actuator with a handwheel directly attached to the operating nut, concentric with the stem. This drives the nut at a one-to-one ratio.
The term "crank type" is used to denote an actuator with a horizontal input shaft which drives the operating nut through a right angle gear set. Drive ratios are available to operate virtually any gate, but it should be noted that at high ratios, e.g., greater than 8:1, the time and effort to manually operate a large gate is substantial. When crank type manual actuators are to be frequently used, or when they require many turns for full gate travel, portable operators should be considered (see comments in Portable Operators section below).

Interconnected Actuators: For gates with a large width relative to their height, as is common with overflow weirs, interconnected crank type actuators with a common input provide accurate positioning and smooth operation. These assemblies may be manually operated or electrically driven.

Portable Operators: Electric or gasoline powered portable operators of various configurations can be provided to drive crank type actuators. Consult the factory for details.

Electric Actuators: Electric actuators are used for higher loads, higher operating speed (12" -24" per minute), or when gates are operated with relative frequency. Electric actuators can provide remote control of gate position and can be integrated into automatic control systems.

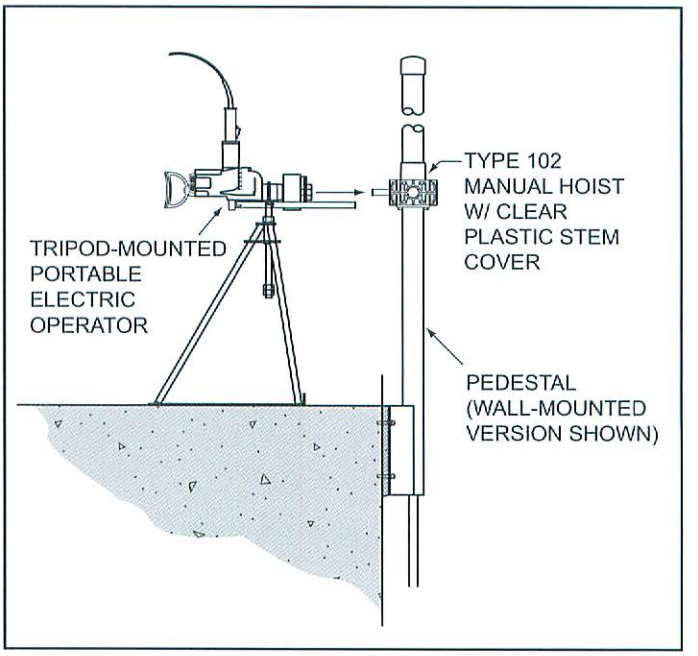

Hydraulic Cylinder Actuators: Hydraulic cylinders can provide smooth and fast operation and they are well suited for automatic control systems which generate frequent cycling of the gate. Hydraulic cylinders actuators can be designed to provide automatic gate positioning upon electric power failure.

Whipps, inc.

Manufacturing high quality gates since 1977

Visit www.whipps.com for additional products manufactured by Whipps, Inc.

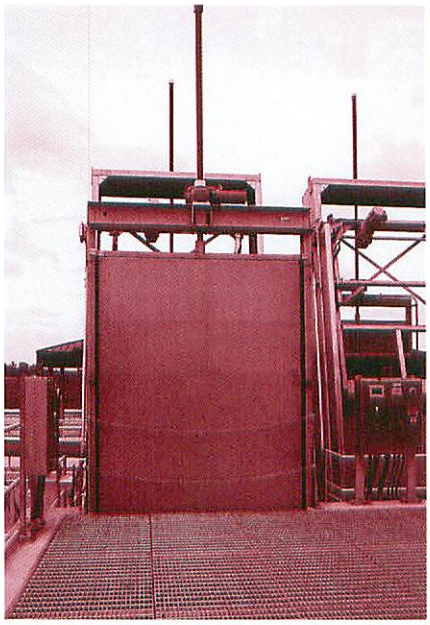

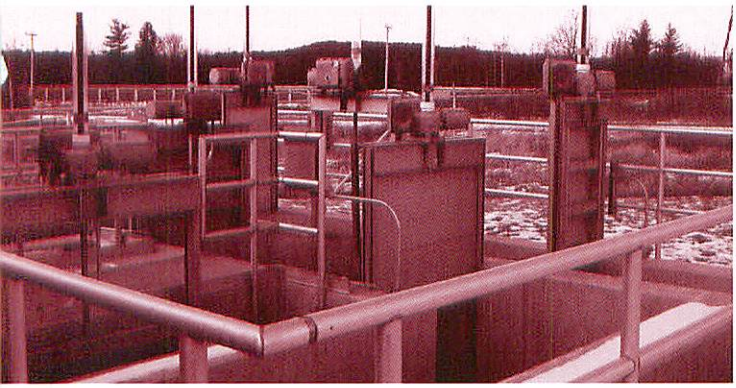

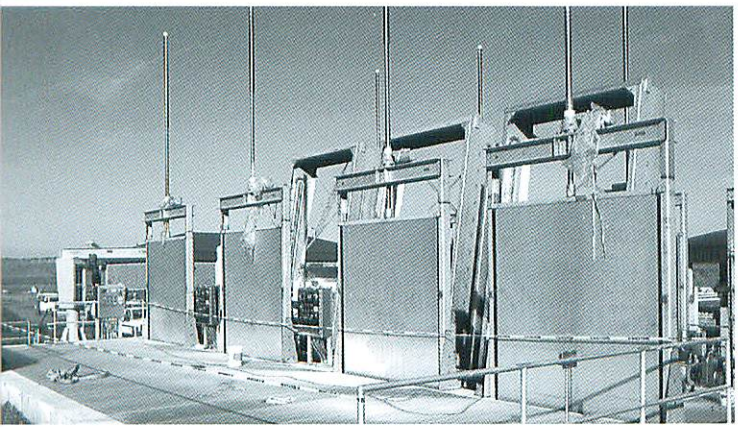

Whipps, inc.

Manufacturing high quality gates since 1977

370 South Athol Road ▪ P.O. Box 1058 ▪ Athol, MA 01331
Telephone: (978) 249-7924 ▪ Fax: (978) 249-3072 ▪ **www.whipps.com**

1000 6/23/08

Whipps Inc.

P.O. Box 1058 - 370 South Athol Rd.
Athol, Massachusetts 01331
USA
Tel: (978)-249-7924
Fax: (978)-249-3072

August 19th, 2011

CERTIFICATE OF COMPLIANCE

Project: 20610 Harold D Thompson Regional WRF

Whipps, Inc. hereby confirms the proposed Stainless Steel slide gate equipment is in full compliance with specification Section 11280 Slide Gates.

Clive Gamble

Clive Gamble

Engineering Manager

Fabricated Sluice Gate, Slide Gate, Weir Gate and Stop Gate

Installation Instructions

Introduction

This manual describes the recommended methods of installation, initial operation and maintenance for Whipps, Inc. fabricated sluice gates, slide gates, weir gates, operating mechanisms and related components. This manual should be used in conjunction with the approved installation drawings provided by Whipps, Inc.

Whipps, Inc. gates are custom built to meet the requirements of each specific application. The gates provided have low leakage characteristics. However, care must be taken in the handling, storage and installation of the equipment to ensure that it will function as intended and restrict leakage within the specified parameters.

The information in this manual is intended only as a recommendation for the proper and satisfactory installation of our equipment. Whipps, Inc. assumes no liability, expressed or implied, for the interpretation of the recommendations or faulty installation of the gates. Whipps, Inc.'s responsibility is limited to defects in manufacturing.

Handling and Storage

To prevent personal injury or equipment damage, follow standard safety procedures when handling equipment and be sure rigging equipment is properly set and in safe working condition.

When unloading the equipment from the box trailer or flat bed truck, use care during removal and storage. If the equipment has been shipped mounted to a wooden skid, lift the skidded material from the bottom.

If damage has occurred in transit, file the necessary report with the freight carrier and contact Whipps, Inc. immediately.

Thoroughly review the packing list and compare the items on the list to the equipment received.

Although Whipps Inc. gates are durable and heavily constructed, care is necessary during storage, handling and installation. Stem threads and hoists have precision surfaces that should be protected from damage.

Equipment should be stored on planks or timbers on a flat surface to keep them off the ground and to prevent distortion. Equipment should be covered with tarps to protect the equipment from foreign matter while stored. Where there are a number of medium or small gates and where storage space is limited, it maybe necessary to stack the gates with heavy timber blocking placed between the gates to prevent damage. When stacking equipment, take care to avoid damaging operator pinion shafts or other components that may extend upward or outward.

If electric actuators or hydraulic cylinders are provided, extra care is required to protect this precision equipment. This equipment should be stored indoors in accordance with the original manufacturer's instructions. For electric actuators, this may include the energizing of heaters upon receipt of units to prevent corrosion of controls. For hydraulic cylinders, this includes storing cylinders vertically to prevent damage to seals.

To prevent bending when handling and storing, stems should be supported over their full length. They should be stored on a flat surface and the threaded portion should be covered and protected from damage. Couplings and thrust nuts (when applicable) may be shipped on the stems and may require removal prior to installation. Stop collars and anchor bolt hardware is normally shipped in a bag or box. Operating mechanisms should be handled and treated as precision machinery and protected accordingly.

Installation

Installation - General

The most important aspects of a gate installation are listed in this section. If these recommendations are followed, a proper gate installation is assured.

Carefully review the installation drawing for each gate prior to installation to confirm proper setting and component location. If the installation drawings are not available, please contact Whipps Inc. at 978-249-7924 or www.whipps.com.

If upstop bolts (upward opening gates) or downstop bolts (downward opening gates) have been removed from the side frames to facilitate installation, they must be re-installed.

Installation - Embedded Frames

1. On gates with embedded side frames and/or an embedded invert member, box-outs or recesses are required in the channel walls and/or the channel floor during the concrete pour. The box-outs shall be of sufficient size to accommodate the gate. See installation drawings for dimensional information.

2. The frame must be well supported prior to the addition of grout to prevent distortion. Distortion of the frame will cause excessive operating effort due to binding of the slide. Distortion of the frame can also cause excessive leakage.

3. Care should be taken to keep the seals and slide free from grout.

Installation – Gate and/or Components Mounted with Anchor Bolts

When anchor bolts are furnished for mounting the gate or components such as pedestals, stem guides and/or wall brackets, the location and projection of the anchor bolts will be shown on the installation drawing. In most cases, epoxy or wedge type anchor bolts will be utilized. When hook type anchor bolts are utilized, the anchor bolts should be placed in the holes drilled in the forms at locations indicated on the drawings. The hook ends of the anchor bolts should then be wired to the opposite form or to reinforcing rods to hold the bolts firmly in place.

Where gates are mounted with anchor bolts it is necessary that a uniform grout pad (non-shrink grout) or a resilient gasket be placed between the flange of the gate and the concrete wall. This grout or gasket is necessary to serve as a seal between the gate and wall and the type will be indicated on the installation drawings. The projection of the anchor bolts, shown on the installation drawings, includes provisions for the grout or gasket. Grout pads might also be required for pedestals, stem guides or wall brackets.

When a gasket is utilized to seal between the gate and the wall, the wall will need to be straight and plumb. If the wall is not straight and plumb, leakage can occur between the gate and the wall. Removal of the gate, modifications to the wall and re-installation of the gate may be required to rectify this situation.

Gates should not be mounted directly to a wall without grout or a gasket as this will result in leakage between the gate and wall.

1. All anchor bolts should be checked to prior to installation to ensure that the threads are undamaged. Anchor bolts should be installed as recommended by the anchor bolt manufacturer.

2. **Do not install the gates without mounting the jacking nuts on the anchor bolts as shown on the installation drawing.** If the jacking nuts are not installed and the outside nuts are overtightened, frame distortion can occur and this can lead to excessive leakage. Frame distortion can pull the seal away from the slide thus creating a path for leakage.

3. In most cases, two nuts will be provided for each anchor bolt. Refer to the installation drawings for details. The jacking nut, should be installed on the anchor bolt prior to mounting the gate, leaving approximately 1 inch for the insertion of grout. The jacking nut needs to be positioned to ensure that the gate will be mounted vertically even if the concrete wall is not straight and plumb.

4. After anchor bolt and jacking nut installation, the gate should be lifted and carefully set in place in such a way as to not damage the threads on the bolts. After the gate is mounted on the anchor bolts, attach the other nuts on the anchor bolts. The use of the double nut arrangement helps to ensure that the gate will be mounted straight and plumb and can be firmly tightened into position without distortion.

5. **Horizontal Invert and Top Seals – Special Care:**

   Wall mounted gates that have a horizontal invert seal, or horizontal top seal: extra care will be required to insure the correct seal compress against the slide plate to insure minimum amount of leakage. This may require that the gate frame with horizontal seals, to be jacked away from the concrete wall to apply more force on the seal that is in contact with the slide plate. This is accomplished by using the jacking nut that was installed the anchor studs behind the horizontal seal. When properly adjusted one should not be able to slide a 0.004 feeler gauge between the seal and the gate disc. **This is one of the most important procedures on installing gates with a horizontal seal member.**

6. With the gate flange located approximately 1 inch from the wall, forms should be mounted around the flange and a non-shrink grout should be placed between the flange and the concrete wall. The grout needs to be completely applied around the perimeter of the gate as shown on the installation drawings. All voids should be filled with grout to ensure that leakage cannot occur between the gate and the wall.

7. Care should be taken to avoid getting grout on the seals or the slide. All grout that adheres to the seals or the slide should be removed.

8. **Closely review the installation drawings, as it might be necessary to grind or cut off a portion of the anchor studs to provide clearance for unimpeded vertical travel of the slide**. In particular, check the anchor bolt projection on the anchor bolts across the top of the opening on upward opening gates with top seals and check the anchor bolt projection across the bottom of the opening on downward opening gates. Where shown, the anchor studs should be cut down to the nut.

9. If any upstop bolts (upward opening gates) or downstop bolts (downward opening gates) were removed from the side frames to facilitate installation, they need to be re-installed.

Installation - Wall Thimbles

1. The front face of the wall thimbles, whether rectangular, square or circular, are marked with vertical centerlines and with "TOP" stamped on the top of the wall thimble. **Wall thimbles should be set in place with the "TOP" mark up and top and bottom centerline marks plumb.**

2. After being set at the proper elevation, the wall thimble must be internally braced to carry the weight of the concrete. Care should be used in placement of the braces so as not to distort the wall thimble. Gate attachment hardware will be misaligned if the wall thimble is distorted.

3. The wall thimble should be firmly supported on the form. Forms should be supported and stiffened against movement. If forms move, they will distort the wall thimble mounting flange and the gate may leak.

4. The tapped holes in the face of the wall thimble must be plugged or capped to prevent concrete from entering the holes.

5. After the concrete has hardened and the forms removed, the front surface of the wall thimble should be thoroughly cleaned. Make sure to remove all concrete that has flowed onto the surface from the edges. All tapped holes should be inspected and cleaned of concrete if necessary.

Installation - Gate Mounted to New Wall Thimble

1. The face of the wall thimble should be thoroughly cleaned and all wall thimble studs in place. Care should be taken to prevent damage to the studs during installation.

2. A gasket material is required between the surface of the wall thimble and the mounting flange of the gate. Mastic is normally used for this purpose and should be applied in accordance with the label directions.

3. If a gasket material other then mastic is used, it should be installed over the studs to provide a smooth mounting surface for the gate. If the gasket is other than one piece, the gasket joints should be aligned in accordance with the match markings and cemented with a liquid-type gasket material. When applying gasket materials, care should be taken to ensure that excessive amounts of lumpy, dried materials are not present when the gate is drawn tightly and evenly to the wall thimble.

4. The mounting flange of the gate should be thoroughly cleaned.

5. The gate can then be lifted and set over the studs and the nuts put in place and tightened. Care should be taken during this process to help ensure that the threads on the studs are not damaged. The sequence of tightening should be done in multiple passes by applying progressively larger force each pass. Equal torque should be applied to all nuts so that the gate is firmly and evenly tightened to the mounting flange without distortion. See following "Nut Tightening Torque" schedule.

Installation - Gate Mounted to an Existing Wall Thimble

See instructions for "Installation - Gate Mounted to a New Wall Thimble" after a close inspection of the existing wall thimble once the front flange is accessible. If the mounting flange of the existing wall thimble is damaged, contact the factory prior to installation.

Installation – Gate Mounted to a Pipe Flange

Where gates are mounted on pipe flanges, the procedure is the same as when the gate is mounted on a wall thimble. The type of attachment hardware shall be as shown on the installation drawings.

Consult the factory for assistance if the flange on which the gate is to be installed is damaged or unusable for any reason.

Nut Tightening Torque

Proper tightening of the nuts on anchor bolts holding the gate to the wall or studs holding the gate to the wall thimble may prevent serious problems in operation or performance of the gate. Tabulated below, are recommended torque values for common fastener sizes.

*DIAMETER (in.)	TORQUE (ft.-lb.)
1/2	35
5/8	75
3/4	100
7/8	150
1	200

Installation – Assembly

On non-self contained gates, some field assembly is required. Refer to the installation drawings for the location and position of all components.

When assembling gates that have dual stems, make sure that the stems are installed straight and plumb. When the operators are installed, it is important that both stems be in proper time and the top of the slide be level.

All pedestals are identified by the installation drawing and/or drawing number and should be used with the proper gate and stem.

1. After the stem has been completely assembled and positioned in place, the operator can be lowered onto the stem and turned into position by operation of the handwheel or crank.

2. Jacking nuts should be placed on the anchor bolts between the operating floor and the base of the pedestal so that it is plumb and the base is approximately 1” above the operating floor.

3. Approximately 1” of grout should then be placed between the pedestal base and the operating floor.

4. After the grout has hardened, the outside anchor nuts should be tightened firmly in place.

5. For manual operators, after the operator has been installed, tension should be applied to the stem by the handle or crank in a direction that would normally open the gate. However, the gate should not be opened. The intent is merely to apply tension that will result in a straight stem.

6. For electric actuators, the gate should be opened with the manual handwheel at least 3 inches before using the electric controls. In this manner, the proper phasing and direction of rotation of the motor can be determined without damaging the gate assembly. Once the unit has been installed, the manufacturer's directions should be followed closely in setting the closing and opening limit switches. The torque switches have been properly set at the factory and should not need adjustment. Follow the manufacturer's instructions if it appears that adjustment is necessary

7. The stem guide, when applicable, should be anchor bolted to the wall in accordance with the installation drawings with uniform clearance possible between the stem and the stem guide bushing.

8. The stem should be thoroughly cleaned and lubricated with a heavy duty industrial grease, such as Shell Alvania #2EP or similar. See lubrication chart.

9. The gates should be placed in the fully closed position. On upward opening gates, the slide should be lowered so that there is minimum compression of the slide onto the invert seal. On downward opening gates, the slide should be positioned as shown on the installation drawing.

10. Stop collars are provided on manually operated gates. The stop collar should be threaded onto the top of the stem only after the operator has been installed and the gate is in the fully closed position. Set the stop collar so there is approximately 1/16" of clearance between the bottom of the stop collar and the top of the operator nut. Set screws should then be tightened to hold the stop collar in place.

11. The crank or handwheel should turn easily. If there is any binding or noise during operation, check to be sure that the stem guides, pedestal and stem are properly aligned and the stem threads are lubricated.

Hydraulic Cylinder Operators

Hydraulic cylinders should be stored in the vertical position and filled with hydraulic fluid. If it is necessary to store them horizontally for a short period, they should be rotated every two weeks to help prevent damage to the seals.

1. Hydraulic cylinders should be mounted on the anchor bolts in such a way that the piston rod and stem are in proper alignment and there is sufficient clearance for piping, fitting, etc.

2. The coupling between the piston rod and the stem should be screwed into place and locked.

3. With the gate in the closed position, the piston should be lowered so that it is in contact with the bottom head of the cylinder.

4. With the piston in this position, the thrust nut should be adjusted on the stem so that it is in contact with the bottom of the thrust nut pocket. Set screws should be tightened to lock it in place. In most cases, the top area of the piston is larger than the underside. Therefore, if pressure applied to both surfaces is the same, more force will be applied in the closing direction than in the opening direction. For that reason, pressure-reducing valves should be provided in the line to the top of the cylinder to lower the pressure to that required to properly close the gate. In this way, full operating pressure can be applied to the bottom of the piston resulting in more opening than closing force. All piping should be thoroughly flushed and cleaned prior to making connection to the hydraulic cylinder.

Prior to Operating

1. Clean both sides of the slide, the guides, seals and stem of all grout, sand, paint and other debris.

2. Check to make sure that stem guides are positioned correctly and are securely fastened.

3. Clean and lubricate the stem threads.

Operating Instructions

Whipps, Inc. fabricated gates are constructed to operate satisfactorily under the specified operating conditions. These gates should be operated with care so as not to exceed the specified conditions. If, in the operation of the gate, an obstruction is met, either in the opening or closing direction, the obstruction should be removed before continuing in the operation. When the gate is fully opened or closed, excessive force should not be placed on the handwheel, crank or gate stem by personnel in an effort to move the gate further. There should never be a need for a pipe extension or other additional leverage applied to the handwheel or crank. If excessive force is required, a thorough visual inspection of the gate assembly and stem is strongly recommended.

If a problem arises in the operation of the gate, such as an unusual head condition or evidence of excessive corrosion, the factory should be consulted before the gate is used or operated.

Installation Inspection Check List

Manually Operated Gates

1. Check hoist, stem guide, and gate attaching bolts for proper tightness.

2. Apply tension to stem and check any stem guides for proper alignment. There must be a uniform clearance between the operating stem and all stem guides.

3. Visually inspect all gate seals, including the invert seal, and both sides of the slide. Thoroughly clean off all foreign matter.

4. Visually inspect the threaded portion of the stem. It must be clean and free of foreign matter, including dirt or sand, and lubricated with a suitable industrial grease. If a wire brush is used to clean the stem, use only a stainless steel type. Do not use carbon steel brush.

5. Adjust stem stop collar to within 1/16" of the top of the hoist operating nut and lock in place.

6. Install stem cover and stem cover indicator strips if applicable.

Maintenance Instructions

Gates

Gates should be visually inspected at regular intervals (at least every six months) for signs of misalignment, damage or corrosive attack. Please keep in mind that corrosion, when it occurs, is most prominent at the water line.

Please note that gates with non-rising stems typically require additional maintenance. If the water level rises to the threaded portion of the stem, the threads may become coated with grit or debris. If the threads become grit laden, the following procedure is recommended to prolong the useful service life of the operating nut (mounted on the slide):

1. The threaded portion of stem should be cleaned and re-greased. The stem must remain free of grit and be sufficiently lubricated to prevent accelerated wear to the operating nut (mounted on the slide).

Manual Operators

At least once a year, all grease fittings (if applicable) should be lubricated with a small amount of heavy duty grease which will not harden in cold weather nor become liquid in warm weather. See Lubrication Chart. Some manual operators may be permanently sealed and these units will not have lubrication fittings.

Electric And Hydraulic Operators

Periodic maintenance schedules should be set-up in accordance with the original manufacturer's operation and maintenance manual.

Modulating Electric Operators

These operators can cause accelerated wear in the operating nut since the stem and gates are operated more frequently and at times continuously.

1. The threaded portion of the stem must be clean and greased at all times.

2. The operating nuts should be removed and inspected for wear after the first six months of operation and every year thereafter.

3. Replace bronze operating nut as soon as noticeable wear is evident.

Operating Stems

It is important that operating stems be periodically cleaned and greased. Even though some environmental conditions are more severe than others and the use of pipe covers will protect stems, they still need to be cleaned and greased at least once every six months, more often if the grease becomes dirty. This is especially important on large gates and/or frequently operated gates such as gates with modulating electric actuators. See Lubrication Chart.

Installation Drawings

The drawings submitted by Whipps, Inc. for approval and/or field use, are planned so that the installation drawing is the master reference.

The drawings depict as much as possible of the structure surrounding the supplied equipment. The location of embedded material such as anchor bolts and wall thimbles are shown. The identification of fasteners and components (studs, anchor bolts, gate assemblies, hoists, stems, stem guides, stem couplings, adaptor plates, wall thimbles, thrust nuts, stop collars and other equipment) is done by calling out physical sizes and/or assembly or detail drawing numbers. More information is available on the detail drawings, which have been included with the installation drawing.

Spare Parts

Whipps, Inc. does not typically recommend the stocking of spare parts by customers or owners since the equipment is designed for a very long service life when recommended maintenance procedures are followed.

If a repair part is required, contact the PARTS DEPARTMENT at Whipps, Inc. at 978-249-7924 or www.whipps.com with as much of the following information as possible:

1. Plant name and location.

2. Original (four or five digit) shop order number which is indicated on correspondence and installation drawings.

3. The installation drawing number, and a description of the part, with any other available drawing numbers or the size (width x height) and location of the gate in the plant.

4. Description of damage and cause. (Digital photos of damage are useful.)

5. Approximate delivery requirements.

Field Service Policy

The equipment furnished on this order has been inspected prior to leaving the factory and has been accepted by the freight carrier. Please check the packing list accompanying the shipment for shortages and examine the equipment for damages prior to accepting the shipment. Before handling, storing or installing this equipment, read the installation manual that accompanies the shipment.

Damage In Transit

If the equipment has been damaged in transit, the purchaser is responsible for filing the claim with the transport company. Contact Whipps, Inc. for assistance in filing the claim.

Installation, Inspection and Adjustment

Installation supervision, inspection of installed equipment, setting of limit switches and certification of satisfactory initial operation are not included unless specifically indicated on the customer's purchase order and accepted by the company. Otherwise, Whipps, Inc. will provide this service at the standard published charges.

Field Issues

If trouble develops either in the installation, operation or performance of the equipment, the installation manual and drawings should be checked to determine if the equipment has been installed properly. If proper performance or operation cannot be obtained and assistance from the factory is desired, please contact Whipps Inc or the local representative. Arrangements will be made to send a service technician to the job site if this is required. The service technician will make a thorough examination of the problem and if the equipment is faulty in workmanship or material, the necessary repairs will be made by the factory at no cost to the purchaser if within the warranty period.

If, however, the problem is due to faulty installation or adjustment, the cost of the field service will be charged to the purchaser.

If repairs are made in the field by the purchaser or authorized by the purchaser, back charges for these repairs will not be accepted by the company unless the company has been notified prior to the incurring of these costs and has accepted the responsibility for these repairs.

Whipps, Inc. will not be liable for contingent costs or costs of delays due to the faculty equipment and the repairs thereof.

Field Service Charges

Field service charges begin from the time of departure until the return of the service person and include a daily rate plus travel and subsistence expenses. Premium day and hour rates will be charge on Saturdays, Sundays, and Holidays and for time spent before 6 a.m. or after 5 p.m., or over eight hours per day. A schedule of Field Service charges is available from the Whipps, Inc. Field Service Department.

In an EMERGENCY SITUATION, check the following:

Check the operator where the operator and stem interface. In particular, check the operating nut to ensure that the nut is intact. If the internal threads on the nut have been stripped, proceed with replacement of the nut. If a stripped nut has caused the slide to drop and the slide needs to be raised, a mechanical means of lifting the slide will be required. Once lifted, the slide should be secured in place.
If the operating nut is intact, check the connection between the lower portion of the stem and the slide. On gates with rising stems, this connection is typically a bolted connection. On gates with non-rising stems, there may be a bronze thrust nut. If a thrust nut is used, check the internal threading on the thrust nut to ensure that nut has not been stripped. If a stripped nut has caused the slide to drop and the slide needs to be raised, a mechanical means of lifting the slide will be required. The stem may need to be removed prior to raising the slide. Once lifted, the slide should be secured in place.
If the gate is outfitted with electric actuator and the actuator is not functioning, please consult the troubleshooting portion of the O&M manual.

If there are no apparent problems with the operating nut, thrust nut or actuator, visually inspect the gate to ensure that there are no obstructions preventing operation.

Whipps, inc.

P.O. Box 1058 • 370 South Athol Rd.
Athol, Massachusetts 01331
Phone: (978) 249-7924
Fax: (978) 249-3072

LUBRICATION CHART

Equipment	Method	Recommended Types	Frequency
Type 101 Manual Actuator	Grease Gun	Mobil - Mobilux EP2 Chevron Ultra Duty EP-2 Sunoco - Ultra Prestige Or Equal	***Every 1 month***
Type 102 Manual Actuator	Grease Gun	Mobil - Mobilux EP2 Chevron Ultra Duty EP-2 Sunoco - Ultra Prestige Or Equal	***Every 1 month***
Type 104 Manual Actuator	Grease Gun	Mobil - Mobilux EP2 Chevron Ultra Duty EP-2 Sunoco - Ultra Prestige Or Equal	***Every 1 month***
Operating Stems	Clean with S.S. wire brush, apply grease	Kendall - L-428 Mobil – Centaur Moly Or Equal	***Every 1 month***

ADHESIVE ANCHOR RECOMMENDATIONS

ADHESIVE SUPPLIED BY INSTALLER TO BE:

- **HILTI** HIT RE500 EPOXY ADHESIVE
- **ITW RAMSET / REDHEAD** EPCON CERAMIC 6 EPOXY ADHESIVE
- OR APPROVED EQUAL

Whipps Inc. Supplies the Threaded Rod, Nuts & Washers required for installation.

Unless otherwise noted, the embedment depth required for each size anchor will be

Anchor Diameter	Embedment Depth
1/2"	4-1/2"
5/8"	6"
3/4"	7"
7/8"	8"
1"	9"